General Information

Specifications

Ignition system

Items		Specification
Ignition coil	Primary resistance	0.7 ± 15 % (Ω)
	Secondary resistance	-
Spark plugs (Unleaded)	Type	RER8MC
	Gap	1.0 ~ 1.1 mm (0.0394 ~ 0.0433in.)

Starting system

Items			Specification
Starter	Rated voltage		12.V, 0.9 kW
	No. of pinion teeth		8
	No-load characteristics	Voltage	11.5V
		Ampere	60 MAX
		Speed	5500 rpm, MIN
	Commutator diameter	Standard	32.9 ~ 33.0 mm (1.2953 ~ 1.2992in.)
	Under cut depth	Standard	0.7 ~ 0.9 mm (0.0276 ~ 0.0354in)
		Limit	0.4 mm (0.0157in)

Charging system

Items		Specification
Alternator	Type	Battery voltage sensing
	Rate voltage	13.5 V, 90A
	Speed in use	1,000 ~ 18,000 rpm
	Voltage regulator	IC Regulator built-in type
	Regulator setting voltage	14.55 ± 0.2 V (At 20℃ full chareged batt)
	Temperature compensation	-7 ± 3 mV / ˚C
Battery	Type	36 - 21GL
	Cold cranking amperage [at -18˚C(-0.4˚F)]	410 A
	Reserve capacity	80 min
	Specific gravity [at 20˚C(68˚F)]	1.280 ± 0.01

CAUTION

- **COLD CRANKING AMPERAGE is the amperage a battery can deliver for 30 seconds and maintain a terminal voltage of 7.2V or greater at a specified temperature.**
- **RESERVE CAPACITY RATING is amount of time a battery can deliver 25A and maintain a minimum terminal voltage of 10.5V at 26.7˚C(80.1˚F).**

NOTICE

- Battery type notation: □□ - □□ □ □
  ① ② ③ ④

① : 5HR capacity
② : Battery length (A)
③ : Battery width (B)
④ : Terminal location (C)

SXMEE9102L

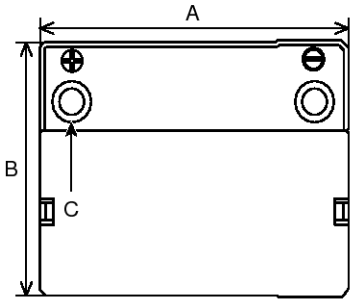

SXMEE9103L

Troubleshooting

Ignition System

Symptom	Suspect area	Remedy
Engine will not start or is hard to start (Cranks OK)	Ignition lock switch	Inspect ignition lock switch, or replace as required
	Ignition coil	Inspect ignition coil, or replace as required
	Spark plugs	Inspect spark plugs, or replace as required
	Ignition wiring disconnected or broken	Repair wiring, or replace as required
	Spark plugs cable	Inspect cable, or replace as required
Rough idle or stalls	Ignition wiring	Repair wiring, or replace as required
	Ignition coil	Inspect ignition coil, or replace as required
	Spark plugs cable	Inspect cable, or replace as required
Engine hesitates / poor acceleration	Spark plugs and spark plug cables	Inspect spark plugs / cable, or replace as required
	Ignition wiring	Repair wiring, or replace as required
Poor mileage	Spark plugs and spark plug cables	Inspect spark plugs / cable, or replace as required

Charging System

Symptom	Suspect area	Remedy
Charging warning indicator does not light with ignition switch "ON" and engine off.	Fuse blown	Check fuses
	Light burned out	Replace light
	Wiring connection loose	Tighten loose connection
	Electronic voltage regulator	Replace voltage regulator
Charging warning indicator does not go out with engine running. (Battery requires frequent recharging)	Drive belt loose or worn	Adjust belt tension or replace belt
	Battery cable loose, corroded or worn	Inspect cable connection, repair or replace cable
	Electronic voltage regulator or alternator	Replace voltage regulator or alternator
	Wiring	Repair or replace wiring
Overcharge	Electronic voltage regulator	Replace voltage regulator
	Voltage sensing wire	Repair or replace wiring
Discharge	Drive belt loose or worn	Adjust belt tension or replace belt
	Wiring connection loose or short circuit	Inspect wiring connection, repair or replace wiring
	Electronic voltage regulator or alternator	Replace voltage regulator or alternator
	Poor grounding	Inspect ground or repair
	Worn battery	Replace battery

Starting System

Symptom	Suspect area	Remedy
Engine will not crank	Battery charge low	Charge or replace battery
	Battery cables loose, corroded or worn out	Repair or replace cables
	Transaxle range switch (Vehicle with automatic transaxle only)	Refer to TR group-automatic transaxle
	Fuse blown	Replace fuse
	Starter motor faulty	Replace
	Ignition switch faulty	Replace
Engine cranks slowly	Battery charge low	Charge or replace battery
	Battery cables loose, corroded or worn out	Repair or replace cables
	Starter motor faulty	Replace
Starter keeps running	Starter motor	Replace
	Ignition switch	Replace
Starter spins but engine will not crank	Short in wiring	Repair wiring
	Pinion gear teeth broken or starter motor	Replace
	Ring gear teeth broken	Replace fly wheel or torque converter

Special Service Tools

Tool (Number and name)	Illustration	Use
Micro-570 Battery checker	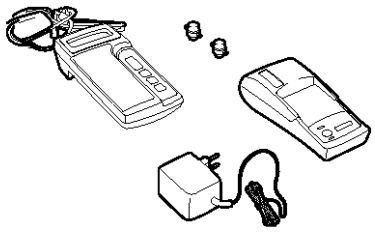 LBLG001A	- Check the battery condition - Check the charging and starting system

The Micro 570 Analyzer

The Micro 570 Analyzer provides the ability to test the charging and starting systems, including the battery, starter and alternator.

⚠CAUTION

Because of the possibility of personal injury, always use extreme caution and appropriate eye protection when working with batteries.

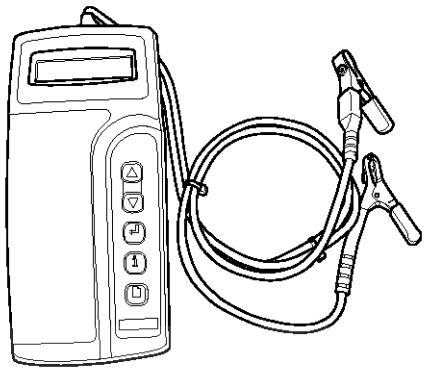

EBKD001A

Keypad

The Micro 570 button on the key pad provide the following functions :

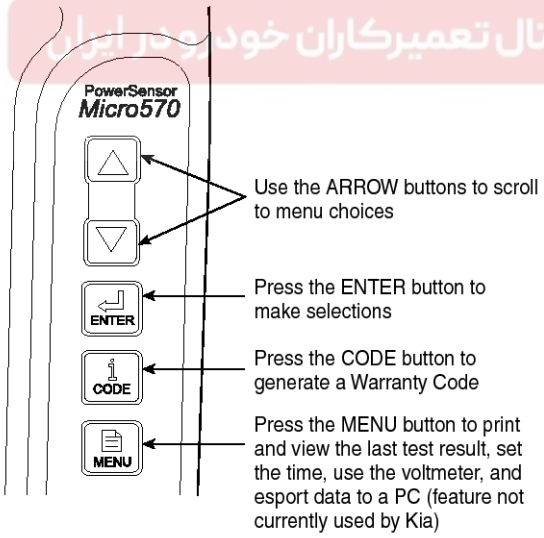

LBGE012A

Battery Test Procedure

1. Connect the tester to the battery.
   - Red clamp to battery positive (+) terminal.
   - Black clamp to battery negative (-) terminal.

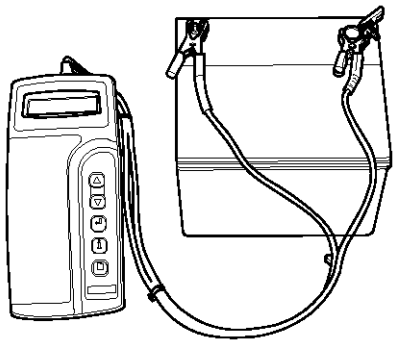

EBKD001C

⚠CAUTION

Connect clamps securely. If "CHECK CONNECTION" message is displayed on the screen, reconnect clamps securely.

2. The tester will ask if the battery is connected "IN-VEHICLE" or "OUT-OF-VEHICLE". Make your selection by pressing the arrow buttons; then press ENTER.

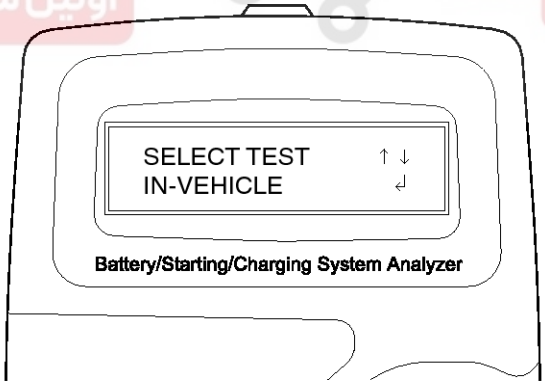

SXMEE9129D

3. Select CCA and press the ENTER button.

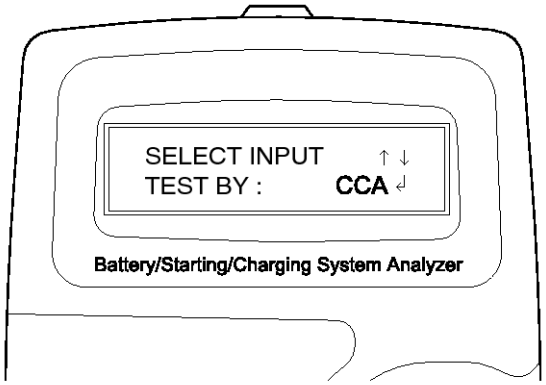

SXMEE9130D

NOTICE

CCA : Cold cranking amps, is an SAE specification for cranking batteried at -0.4˚F (-18˚C).

4. Set the CCA value displayed on the screen to the CCA value marked on the battery label by pressing up and down buttons and press ENTER.

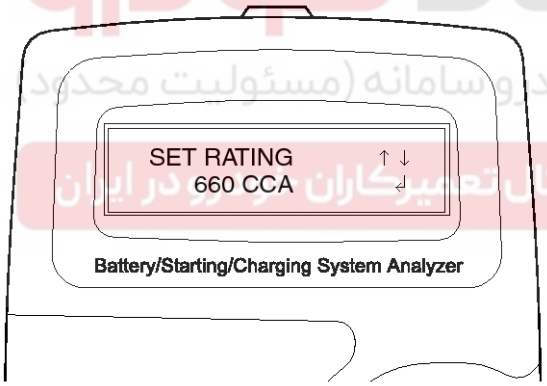

EBKD001F

NOTICE

The battery ratings(CCA) displayed on the tester must be identical to the ratings marked on battery label.

5. The tester will conduct battery test.

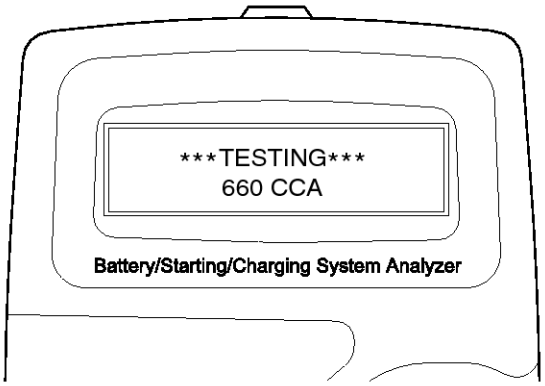

SXMEE9131D

6. The tester displays battery test results including voltage and battery ratings.

   Refer to the following table and take the appropriate action as recommended by the Micro 570.

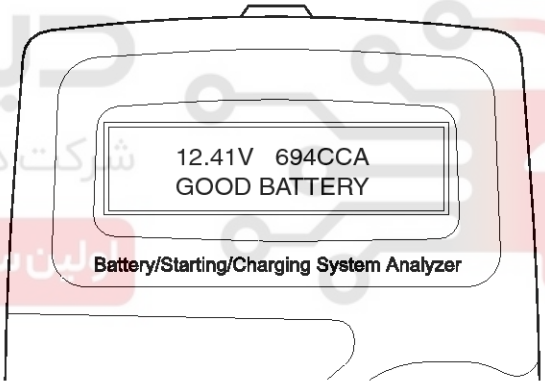

SXMEE9132D

Battery Test Results

Result On Printer	Remedy
GOOD BATTERY	No action is required
GOOD RECHARGE	Battery is in a good state Recharge the battery and use
CHARGE & RETEST	Battery is not charged properly - Charge and test the battery again. (Failure to charge the battery fully may read incorrect measurement value)
REPLACE BATTERY	Replace battery and recheck the charging system. - Improper connection between battery and vehicle cables may cause "REPLACE BATTERY", retest the battery after removing cables and connecting the tester to the battery terminal directly prior to replacing the battery.
BAD CELL-REPLACE	Charge and retest the battery. - If the Micro 570 recommends "REPLACE BATTERY", replace the battery and recheck the charging system.

WARNING

Whenever filing a claim for battery, the print out of the battery test results must be attached.

Starter Test Procedure

7. After the battery test, press ENTER immediately for the starter test.

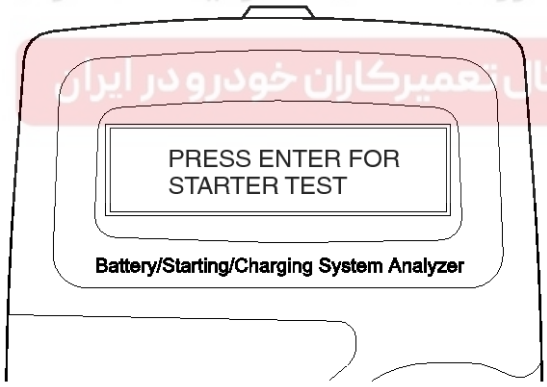

EBKD001H

8. Start the engine.

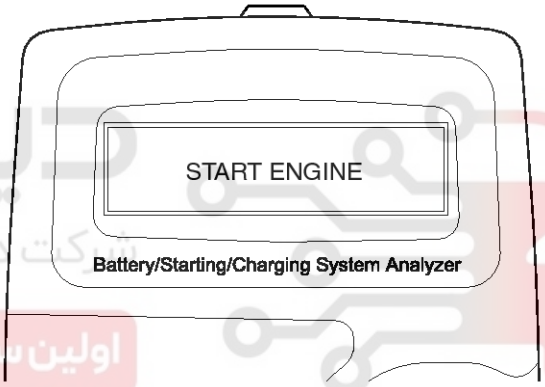

EBKD001I

9. Cranking voltage and starter test results will be displayed on the screen.

   Refer to the following table and take the appropriate action as recommended by the Micro 570.

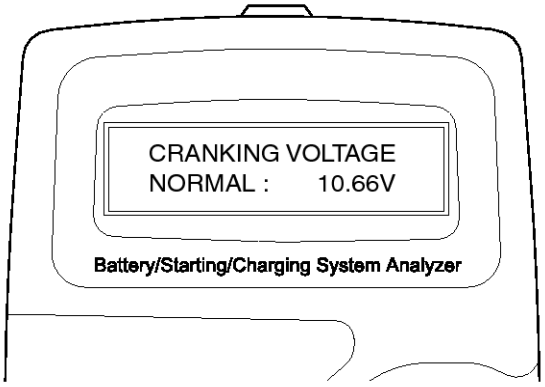

SXMEE9133D

Starter Test Results

Result On Printer	Remedy
CRANKING VOLTAGE NORMAL	System shows a normal starter draw
CRANKING VOLTAGE LOW	Cranking voltage is lower than normal level - Check starter
CHARGE BATTERY	The state of battery charge is too low to test - Charge the battery and retest
REPLACE BATTERY	Replace battery - If the vehicle is not started though the battery condition of "GOOD BATTERY" is displayed, check wiring for open circuit, battery cable connection, starter and repair or replace as necessary. - If the engine does crank, check fuel system.

NOTICE

When testing the vehicle with old diesel engines, the test result will not be favorable if the glow plug is not heated. Conduct the test after warming up the engine for 5 minutes.

Charging System Test Procedure

10. Press ENTER to begin charging system test.

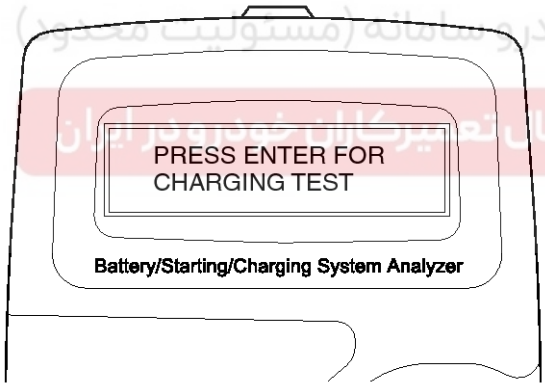

EBKD001K

11. The tester displays the actual voltage of alternator. Press ENTER to continue.

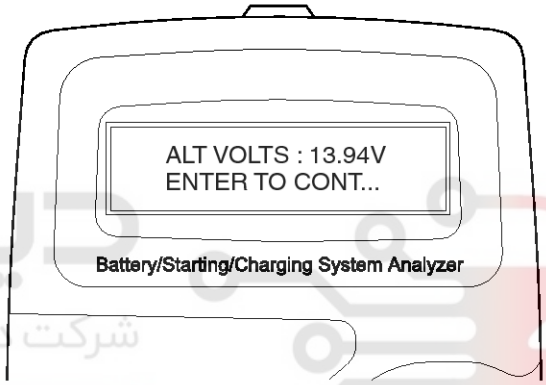

EBKD001L

12. Turn off all electrical load and rev engine for 5 seconds with pressing the accelerator pedal. (Follow the instructions on the screen)

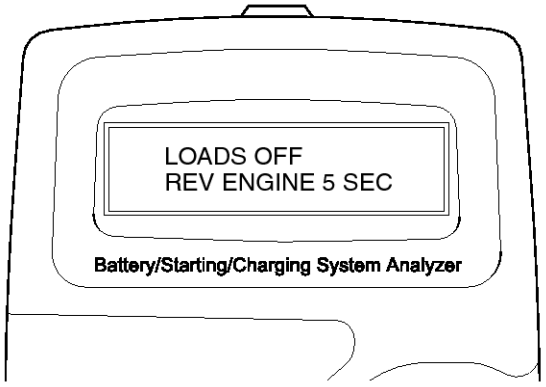

EBKD001M

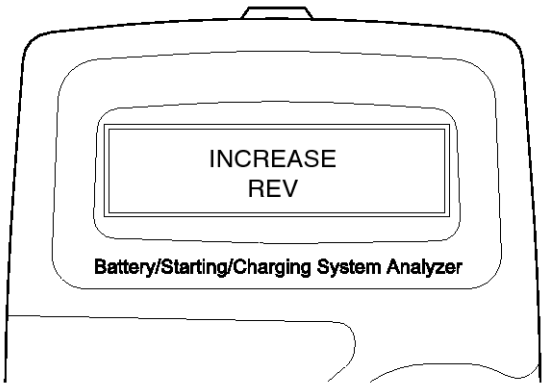

SXMEE9134D

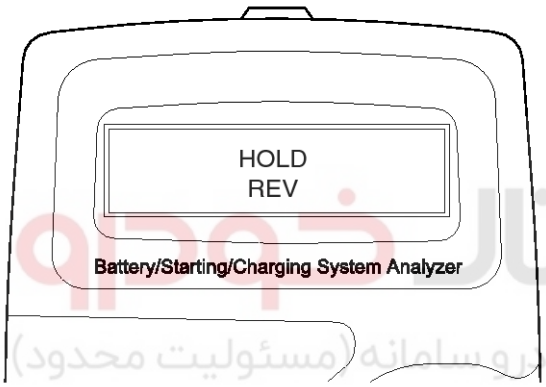

SXMEE9135D

13. The message that engine RPM is detected will be displayed on the screen. Press ENTER to continue.

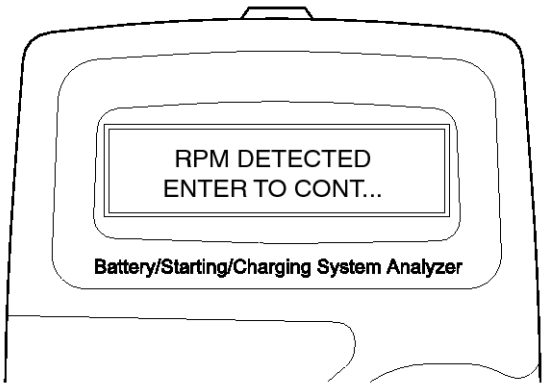

SXMEE9136D

14. If the engine RPM is not detected, press ENTER after revving engine.

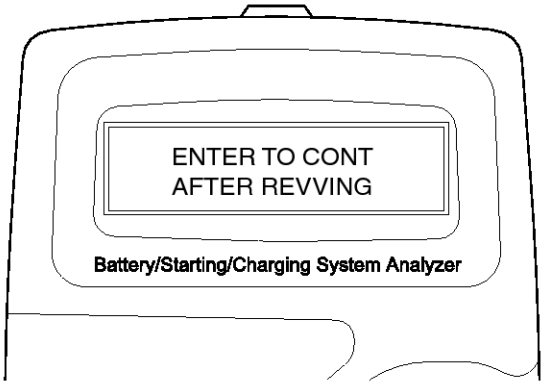

SXMEE9137D

15. The tester will conduct charging system test during loads off.

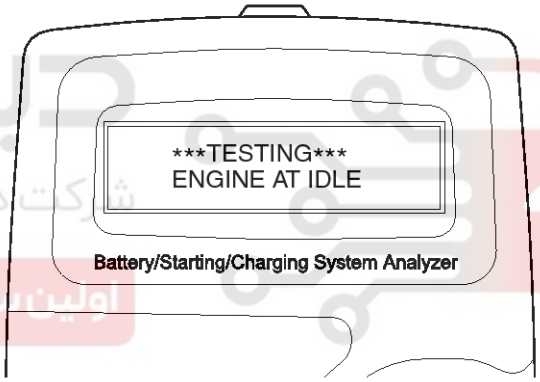

EBKD001O

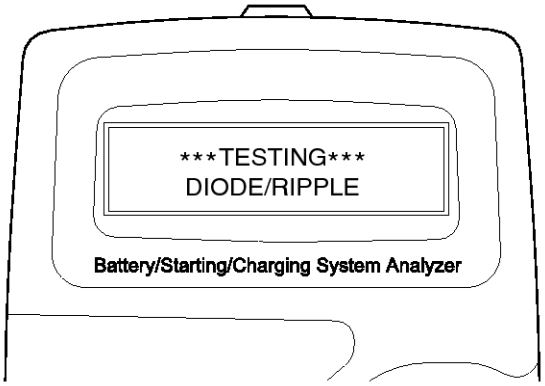

SXMEE9138D

16. Turn on electrical loads (air conditioner, lamps, audio and etc). Press ENTER to continue.

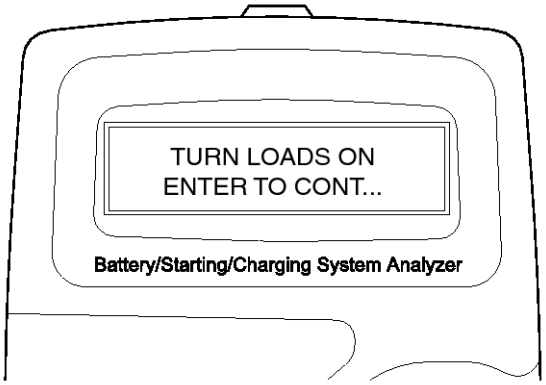

SXMEE9139D

17. The tester will conduct charging system test during loads on.

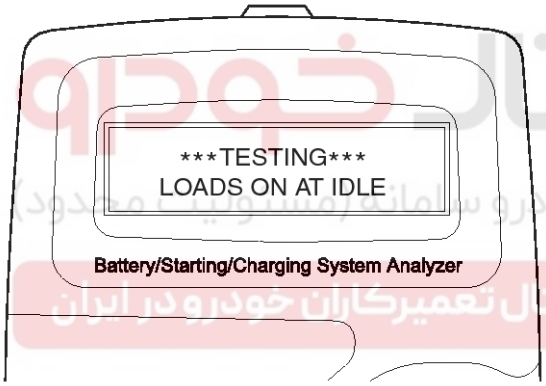

SXMEE9140D

18. Rev engine for 5 seconds with pressing the accelerator pedal. (Follow the instructions on the screen)

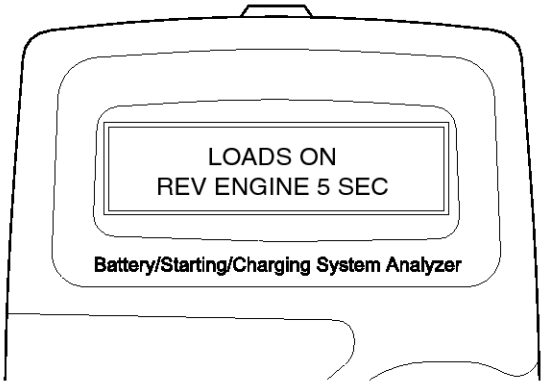

SXMEE9141D

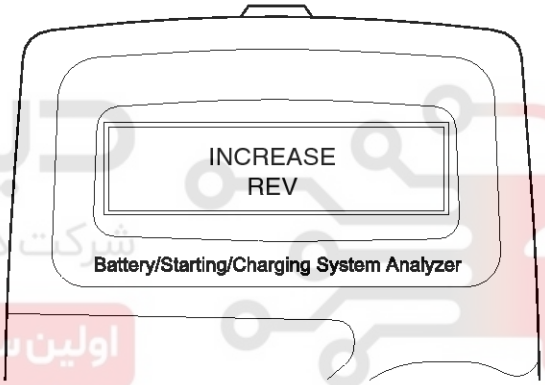

SXMEE9142D

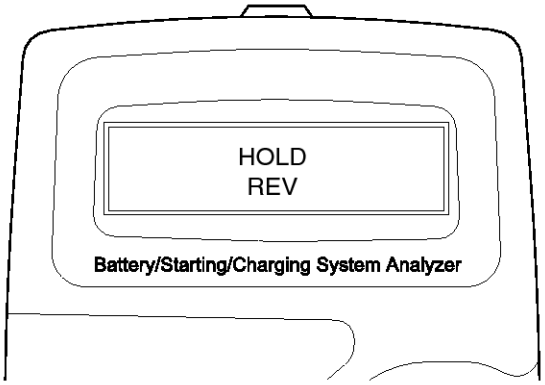

SXMEE9143D

19. The message that engine RPM is detected will be displayed on the screen. Press ENTER to continue.

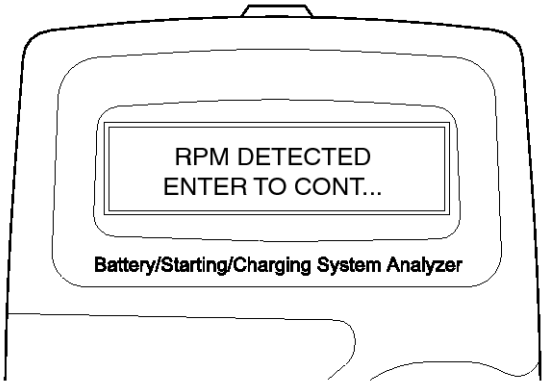

SXMEE9144D

20. If the engine RPM is not detected, press ENTER after revving engine.

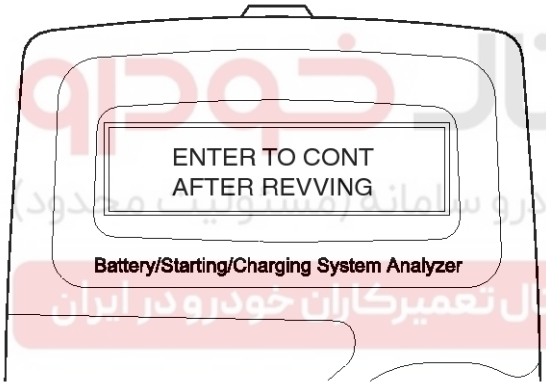

SXMEE9145D

21. Turn off electrical loads (air conditioner, lamps, audio and etc). Turn the engine off.

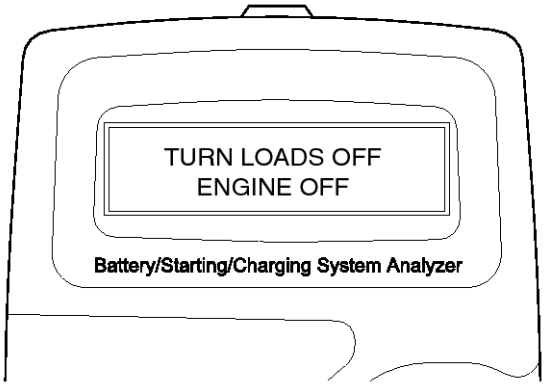

SXMEE9146D

22. Charging voltage and charging system test results will be displayed on the screen.

Shut off engine end disconnect the tester clamps from the battery. Refer to the following table and take the appropriate action as recommended by the Micro 570.

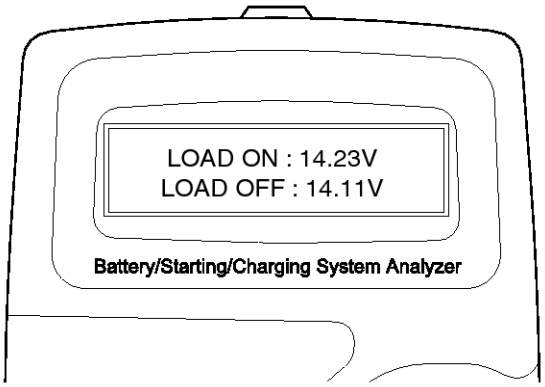

SXMEE9147D

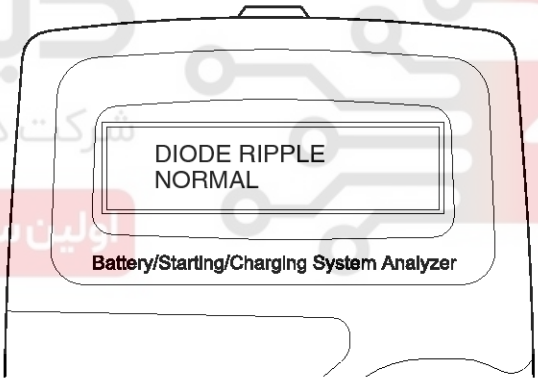

EBKD001P

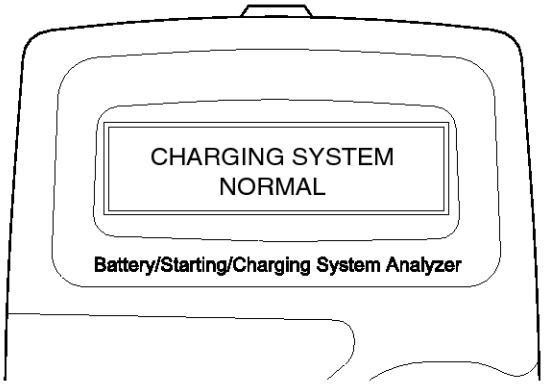

SXMEE9148D

Charging System Test Results

Result On Printer	Remedy
CHARGING SYSTEM NORMAL / DIODE RIPPLE NORMAL	Charging system is normal
NO CHARGING VOLTAGE	Alternator does not supply charging current to battery - Check belts, connection between alternator and battery and replace belts or cable or alternator as necessary
LOW CHARGING VOLTAGE	Alternator does not supply charging current to battery and electrical load to system fully - Check belts and alternator and replace as necessary
HIGH CHARGING VOLTAGE	The voltage from alternator to battery is higher than normal limit during voltage regulating. - Check connection and ground and replace regulator as necessary - Check electrolyte level in the battery
EXCESS RIPPLE DETECTED	One or more diodes in the alternator is not functioning properly - Check alternator mounting and belts and replace as necessary

Ignition System

Descrition

Ignition timing is controlled by the electronic control ignition timing system. The standard reference ignition timing data for the engine operating conditions are pre-programmed in the memory of the ECM (Engine Control Module).

The engine operating conditions (speed, load, warm-up condition, etc.) are detected by the various sensors. Based on these sensor signals and the ignition timing data, signals to interrupt the primary current are sent to the ECM. The ignition coil is activated, and timing is controlled.

On-vehicle Inspection

Spark Test

1. Remove the engine cover(A) and the engine center cover(B).

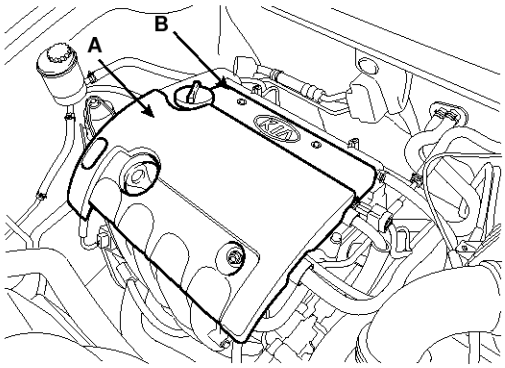

STDEM9053D

2. Remove the ignition coils(A).

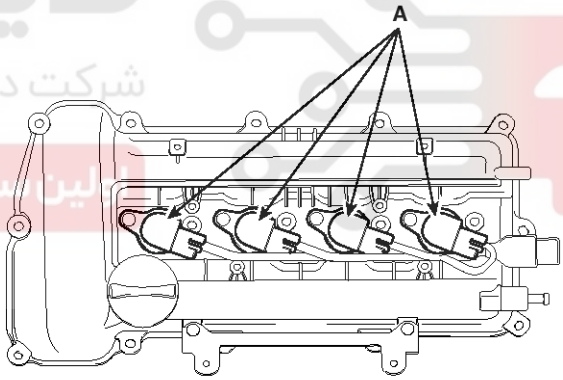

SEDEM7302L

3. Remove the fuel pump relay(A) from the fuse box for fuel not to be injected while checking.

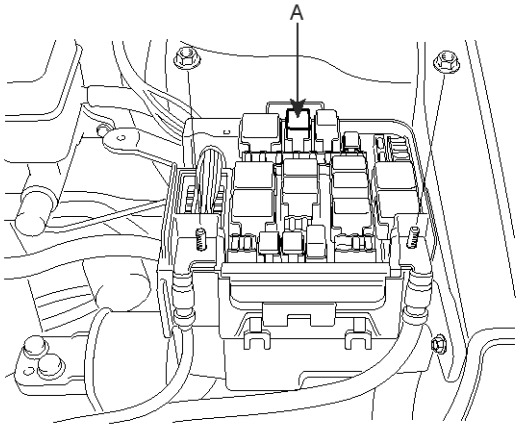

STDEE9100D

4. Using a spark plug socket, remove the spark plug.
5. Install the spark plug to the ignition coil.
6. Ground the spark plug to the engine.

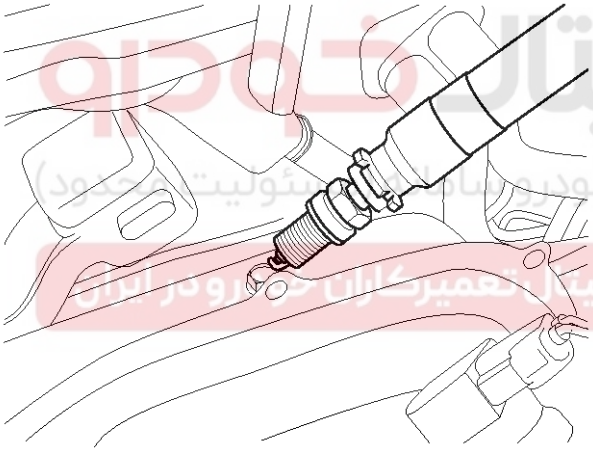

SHDEE6003D

7. Check if spark occurs while engine is being cranked.

NOTICE

Do not crank engine for more then 5~10 seonds.

8. Inspect all the spark plugs.
9. Using a spark plug socket, install the spark plug.
10. Install the ignition coil.

Tightening torque :
9.8 ~11.8 Nm (1.0~1.2 kgf.m, 7.2~8.7 lb-ft)

11. Install a engine center cover and a engine cover.

Tightening torque :
7.8 ~11.8 Nm (0.8~1.2 kgf.m, 5.8~8.7 lb-ft)

Inspect Spark Plug

1. Remove the ignition coil(A).

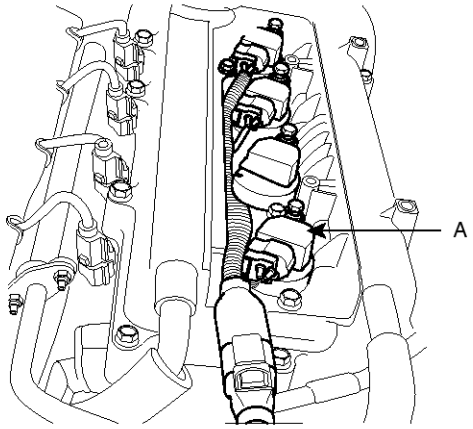

STDEE9107D

NOTICE

When removing the ignition coil connector, pull the lock pin(A) and push the clip(B).

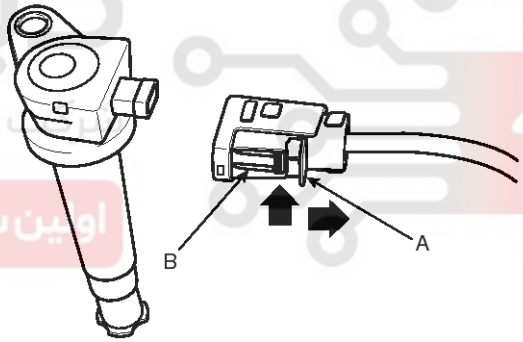

ABGE003A

2. Using a spark plug socket, remove the spark plug.

CAUTION

Be careful that no contaminates enter through the spark plug holes.

3. Inspect the electrodes (A) and ceramic insulator (B).

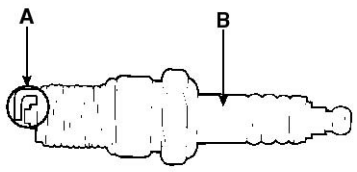

EBKD002K

Inspection Of Electrodes

Condition	Dark deposits	White deposits
Description	- Fuel mixture too rich - Low air intake	- Fuel mixture too lean - Advanced ignition timing - Insufficient plug tightening torque

4. Check the electrode gap (A).

Standard : 1.0 ~ 1.1 mm (0.0394 ~ 0.0433 in.)

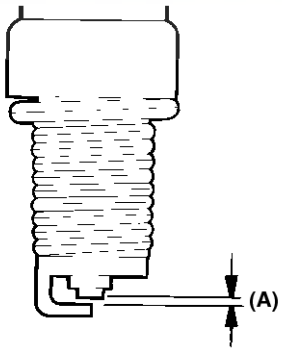

EBKD002L

Inspect Ignition Coil

1. Measure the primary coil resistance between terminals (+) and (-).

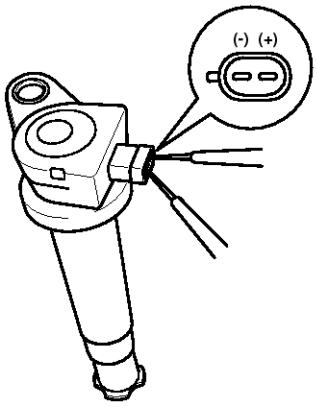

ABGE004A

Standard value: 0.75Ω ± 15%

Charging System

Description

The charging system included a battery, an alternator with a built-in regulator, and the charging indicator light and wire.

The Alternator has eight built-in diodes, each rectifying AC current to DC current.

Therefore, DC current appears at alternator "B" terminal.

In addition, the charging voltage of this alternator is regulated by the battery voltage detection system.

The alternator is regulated by the battery voltage detection system. The main components of the alternator are the rotor, stator, rectifier, capacitor brushes, bearings and V-ribbed belt pulley. The brush holder contains a built-in electronic voltage regulator.

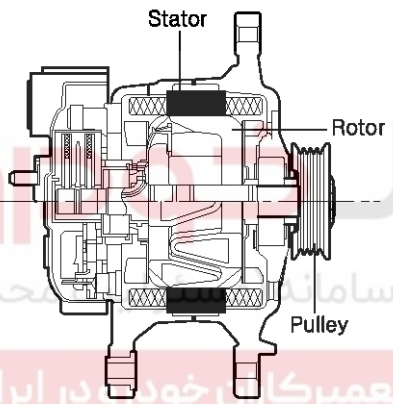

LBJF003A

On-vehicle Inpection

CAUTION

- **Check that the battery cables are connected to the correct terminals.**
- **Disconnect the battery cables when the battery is given a quick charge.**
- **Never disconnect the battery while the engine is running.**

Check The Battery Terminals And Fuses

1. Check that the battery terminals are not loose or corroded.
2. Check the fuses for continuity.

Inspect Drive Belt

1. Visually check the belt for excessive wear, frayed cords etc.

   If any defect has been found, replace the drive belt.

   NOTICE

   Cracks on the rib side of a belt are considered acceptable. If the belt has chunks missing from the ribs, it should be replaced.

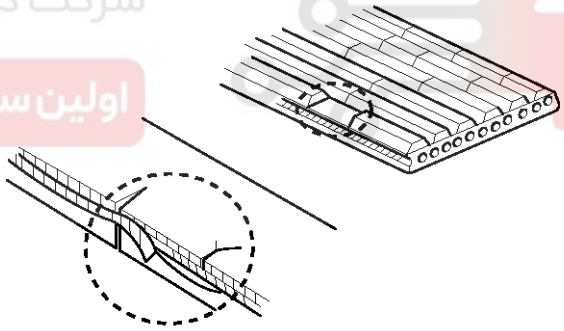

EBKD004B

2. Measure drive belt tension and adjust it if necessary.

Drive belt tension measurement and adjustment

Belt tension measurement

Measure the belt tension using a mechanical tension gauge or a sonic tension meter.

Tension

New belt: 882.6 ~ 980.7N (90 ~ 100kg, 198.4 ~ 220.5lb)
Used belt: 637.4 ~ 735.5N (65 ~ 75kg, 143.3 ~ 165.3lb)

⚠CAUTION

- **If the engine has run for 5 minutes or more, the belt tension must be adjusted as a used belt.**
- **When installing the V-ribbed belt, all grooves on the pulley should be covered with belt ribs.**
- **A loose belt causes slip noise.**
- **Too tight belt cause bearing of alternator and water pump to damage.**

Using a mechanical tension gauge (BT-33-73F, BTG-2 type)

1. While pressing the handle (A) of the gauge, insert the belt (B) between pulley and pulley (or idler) into the gap between spindle (C) and hook (D).

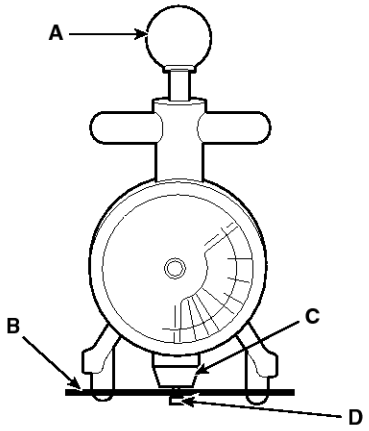

STDEE0002D

2. After releasing the handle (A), read a value on the dial pointed by the indicator (B).

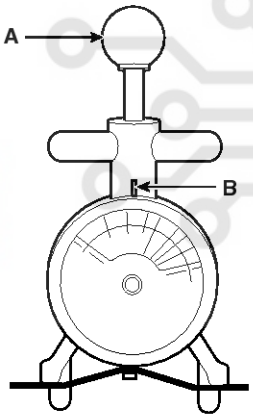

STDEE0212D

Using a sonic tension meter (U-505/507 type)

1. Input the belt specifications into the tension meter.

Belt type	Location of measurement	Input data		
		M (Mass, g/m.rib)	W (Width, rib)	S (Span, mm)
With A/C	Crankshaft pulley to A/C compressor pulley	013.4	006.0	178.9
Without A/C	Idler to alternator pulley	013.4	006.0	Actual measurement value

NOTICE

Measurement of S (Span) : Caculate average value after measuring the distance 3~4 times.

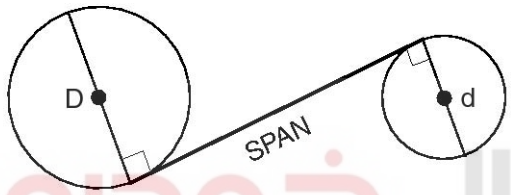

STDEE0213D

D : Idler

d : Alternator pulley

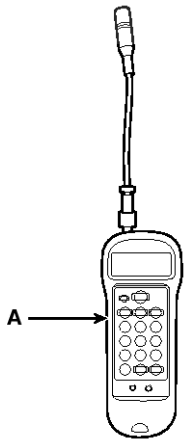

STDEE0003D

2. Locate the micro phone (B) close to the center of belt span (A) and bounce the belt by finger 2~3 times. Read a value on the display.

[With A/C]

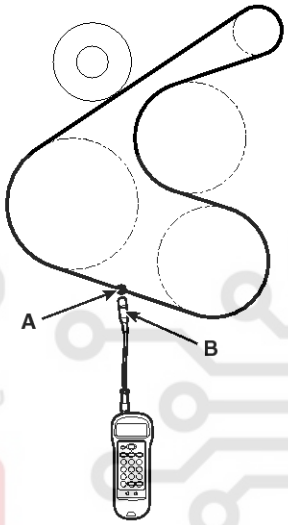

STDEE0215D

[Without A/C]

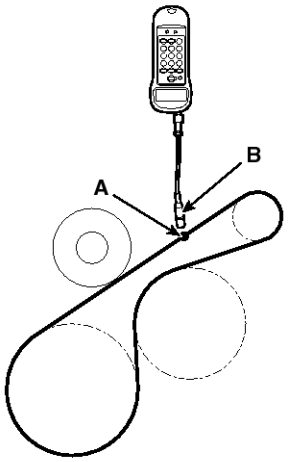

STDEE0216D

If adjustment is necessary:

1. Loosen the mounting bolts (A).
2. Tighten the adjusting bolt(B) clockwise in loose tension ; loosen the bolt counterclockwise in high tension.

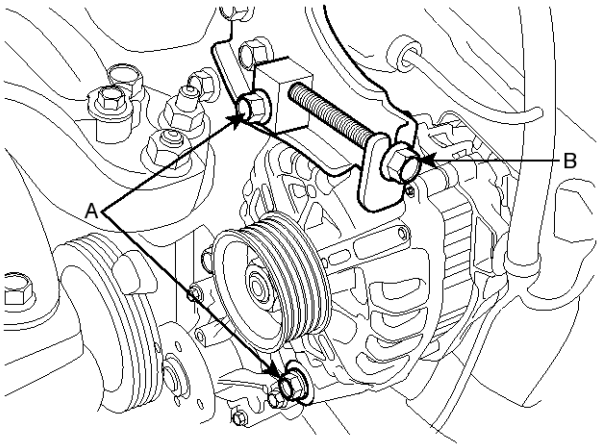

SHDEE6021D

3. Recheck tension of the belt.
4. After adjusting tension, tighten the through bolts.

Tightening torque

12mm (0.47in) bolt : 19.6 ~ 26.5 Nm (2.0 ~ 2.7 kgf.m, 14.5 ~ 19.5 lb-ft)
14mm (0.55in) bolt : 29.4 ~ 41.2 Nm (3.0 ~ 4.2 kgf.m, 21.7 ~ 30.4 lb-ft)

Visually Check Alternator Wiring And Listen For Abnormal Noises

1. Check that the wiring is in good condition.
2. Check that there is no abnormal noise from the alternator while the engine is running.

Check Discharge Warning Light Circuit

1. Warm up the engine and then turn it off.
2. Turn off all accessories.
3. Turn the ignition switch "ON". Check that the discharge warning light is lit.
4. Start the engine. Check that the light is lit.

   If the light does not go off as specified, troubleshoot the discharge light circuit.

Inspect Charging System

Voltage Drop Test Of Alternator Output Wire

This test determines whether or not the wiring between the alternator "B" terminal and the battery (+) terminal is good by the voltage drop method.

Preparation

1. Turn the ignition switch to "OFF".
2. Disconnect the output wire from the alternator "B" terminal. Connect the (+) lead wire of ammeter to the "B" terminal of alternator and the (-) lead wire of ammeter to the output wire. Connect the (+) lead wire of voltmeter to the "B" terminal of alternator and the (-) lead wire of voltmeter to the (+) terminal of battery.

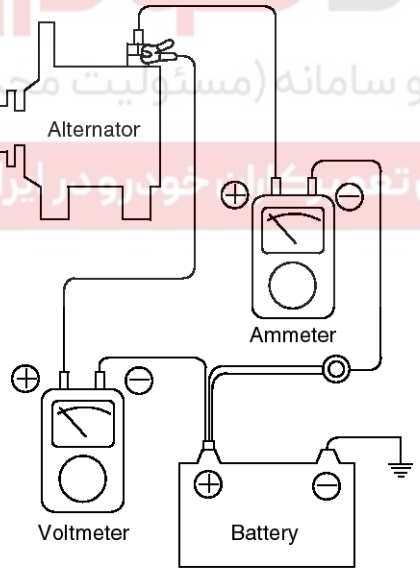

BBGE002A

Test

1. Start the engine.
2. Turn on the headlamps and blower motor, and set the engine speed until the ammeter indicates 20A.

   And then, read the voltmeter at this time.

Result

1. The voltmeter may indicate the standard value.

Standard value: 0.2V max

2. If the value of the voltmeter is higher than expected (above 0.2V max.), poor wiring is suspected. In this case check the wiring from the alternator "B" terminal to the battery (+) terminal. Check for loose connections, color change due to an over-heated harness, etc. Correct them before testing again.
3. Upon completion of the test, set the engine speed at idle.

   Turn off the headlamps, blower motor and the ignition switch.

Output Current Test

This test determines whether or not the alternator gives an output current that is equivalent to the normal output.

Preparation

1. Prior to the test, check the following items and correct as necessary.

   Check the battery installed in the vehicle to ensure that it is good condition. The battery checking method is described in the section "Battery".

   The battery that is used to test the output current should be one that has been partially discharged. With a fully charged battery, the test may not be conducted correctly due to an insufficient load.

   Check the tension of the alternator drive belt. The belt tension check method is described in the section "Inspect drive belt".
2. Turn off the ignition switch.
3. Disconnect the battery ground cable.
4. Disconnect the alternator output wire from the alternator "B" terminal.
5. Connect a DC ammeter (0 to 150A) in series between the "B" terminal and the disconnected output wire. Be sure to connect the (-) lead wire of the ammeter to the disconnected output wire.

   NOTICE
   Tighten each connection securely, as a heavy current will flow. Do not rely on clips.
6. Connect a voltmeter (0 to 20V) between the "B" terminal and ground. Connect the (+) lead wire to the alternator "B" terminal and (-) lead wire to a good ground.
7. Attach an engine tachometer and connect the battery ground cable.

8. Leave the engine hood open.

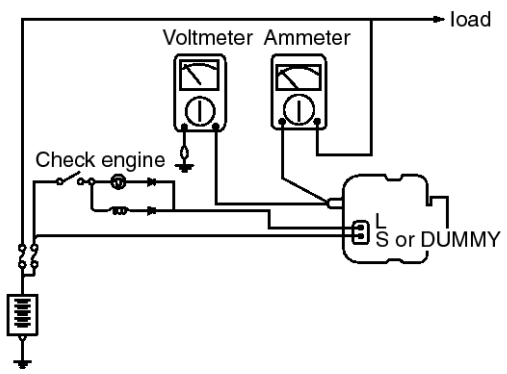

EBKD013H

Test

1. Check to see that the voltmeter reads as the same value as the battery voltage. If the voltmeter reads 0V, and the open circuit in the wire between alternator "B" terminal and battery (+) terminal or poor grounding is suspected.
2. Start the engine and turn on the headlamps.
3. Set the headlamps to high beam and the heater blower switch to HIGH, quickly increase the engine speed to 2,500 rpm and read the maximum output current value indicated by the ammeter.

NOTICE

After the engine start up, the charging current quickly drops.

Therefore, the above operation must be done quickly to read the maximum current value correctly.

Result

1. The ammeter reading must be higher than the limit value. If it is lower but the alternator output wire is in good condition, remove the alternator from the vehicle and test it.

Limit value : 50% of the rate voltage

NOTICE

- *The nominal output current value is shown on the nameplate affixed to the alternator body.*
- *The output current value changes with the electrical load and the temperature of the alternator itself.*

  Therefore, the nominal output current may not be obtained. If such is the case, keep the headlamps on the cause discharge of the battery, or use the lights of another vehicle to increase the electrical load.

  The nominal output current may not be obtained if the temperature of the alternator itself or ambient temperature is too high.

  In such a case, reduce the temperature before testing again.

2. Upon completion of the output current test, lower the engine speed to idle and turn off the ignition switch.
3. Disconnect the battery ground cable.
4. Remove the ammeter and voltmeter and the engine tachometer.
5. Connect the alternator output wire to the alternator "B" terminal.
6. Connect the battery ground cable.

Regulated Voltage Test

The purpose of this test is to check that the electronic voltage regulator controls voltage correctly.

Preparation

1. Prior to the test, check the following items and correct if necessary.

   Check that the battery installed on the vehicle is fully charged. The battery checking method is described in the section "Battery".

   Check the alternator drive belt tension. The belt tension check method is described in the section "Inspect drive belt".
2. Turn ignition switch to "OFF".
3. Disconnect the battery ground cable.
4. Connect a digital voltmeter between the "B" terminal of the alternator and ground. Connect the (+) lead of the voltmeter to the "B" terminal of the alternator. Connect the (-) lead to good ground or the battery (-) terminal.
5. Disconnect the alternator output wire from the alternator "B" terminal.
6. Connect a DC ammeter (0 to 150A) in series between the "B" terminal and the disconnected output wire.

   Connect the (-) lead wire of the ammeter to the disconnected output wire.
7. Attach the engine tachometer and connect the battery ground cable.

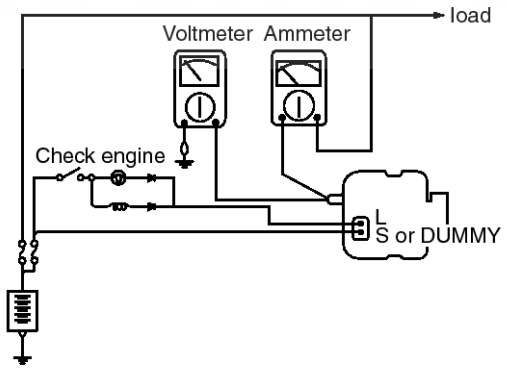

EBKD013H

Test

1. Turn on the ignition switch and check to see that the voltmeter indicates the following value.

Voltage: Battery voltage

If it reads 0V, there is an open circuit in the wire between the alternator "B" terminal and the battery and the battery (-) terminal.

2. Start the engine. Keep all lights and accessories off.
3. Run the engine at a speed of about 2,500 rpm and read the voltmeter when the alternator output current drops to 10A or less

Result

1. If the voltmeter reading is within 13.5 ~ 15.2V, the voltage regulator is functioning correctly. If the reading is other than the standard value, the voltage regulator or the alternator is faulty.
2. Upon completion of the test, reduce the engine speed to idle, and turn off the ignition switch.
3. Disconnect the battery ground cable.
4. Remove the voltmeter and ammeter and the engine tachometer.
5. Connect the alternator output wire to the alternator "B" terminal.
6. Connect the battery ground cable.

Alternator

Components

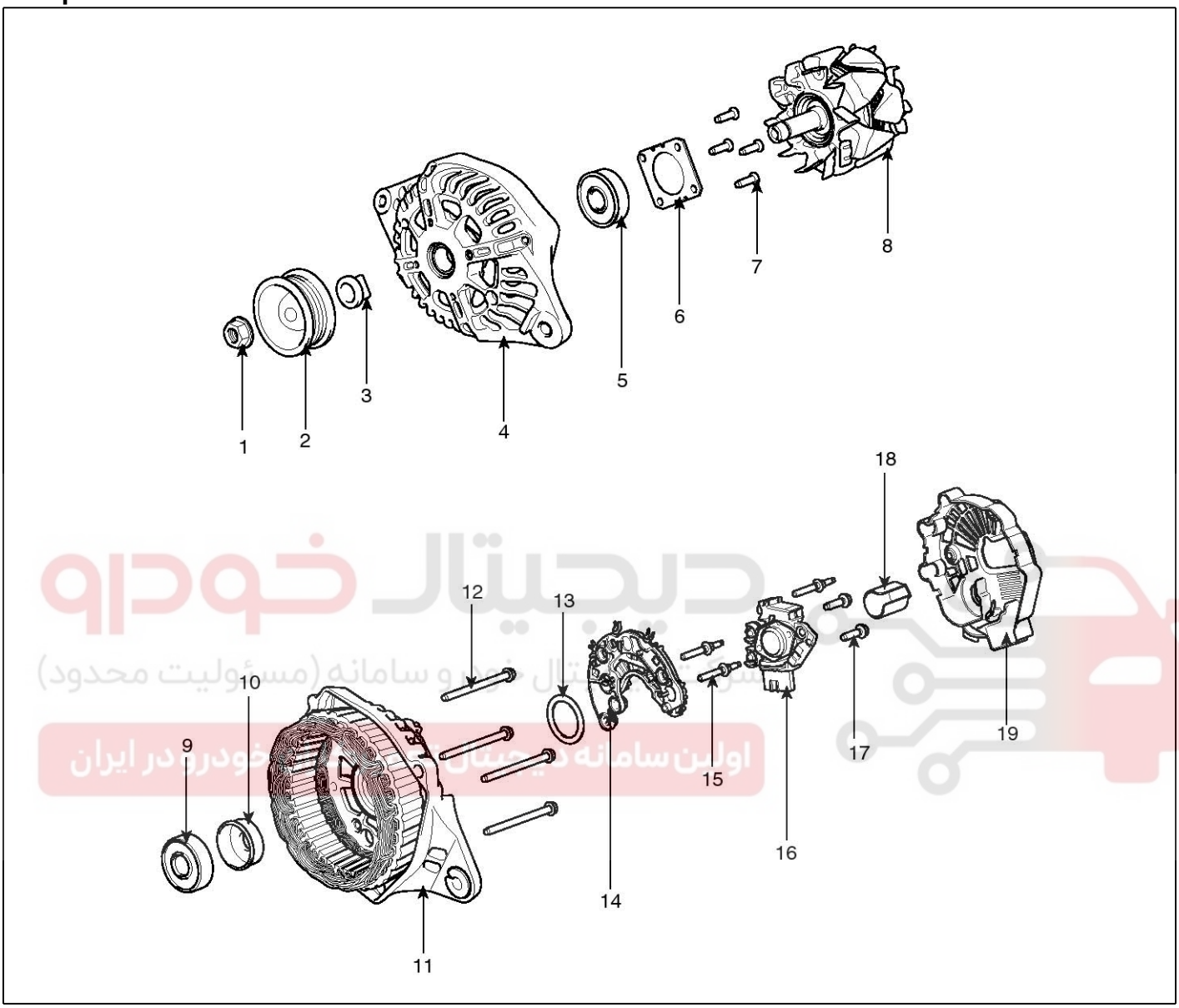

STDEE9101D

1. Nut
2. Pulley
3. Spacer
4. Front cover assembly
5. Front bearing
6. Bearing cover
7. Bearing cover bolt
8. Rotor
9. Rear bearing
10. Bearing cover
11. Rear cover
12. Bolts
13. Seal
14. Rectifier assembly
15. Stud bolts
16. Brush holder assembly
17. Brush holder bolts
18. Slip ring guide
19. Cover

Replacement

1. Disconnect the battery negative terminal first, then the positive terminal.
2. Remove the engine cover(A).

Tightening torque :
7.8~11.8 Nm (0.8~1.2 kgf.m, 5.8~8.7 lb-ft)

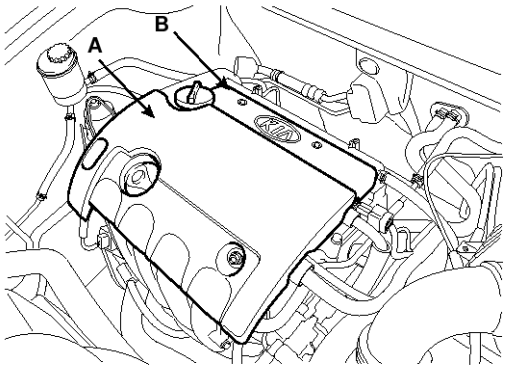

STDEM9053D

3. Loosen the tension adjusting bolt (A).

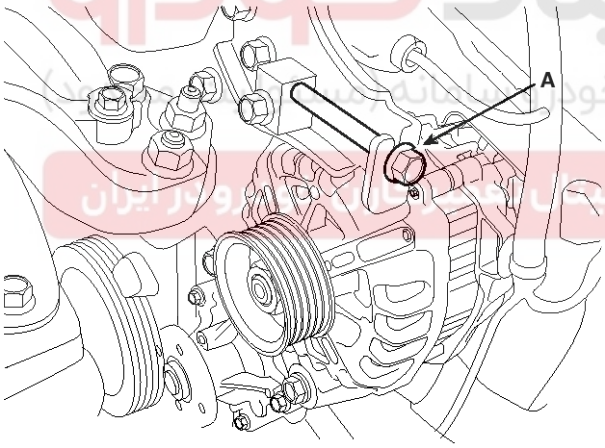

STDEE9108D

4. Remove the drive belt (A).

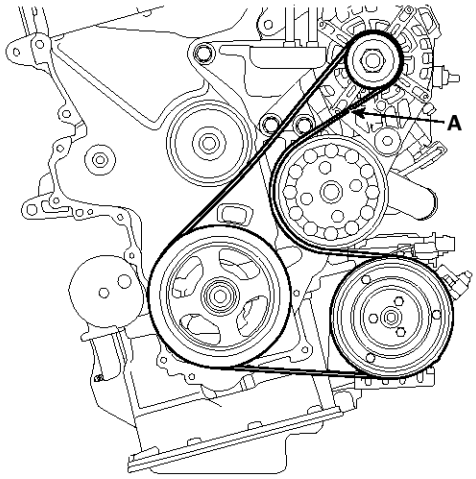

STDEE9100L

5. Disconnect the air compressor connector(A) and the alternator connector (B), and remove the cable (C) from alternator "B" terminal.

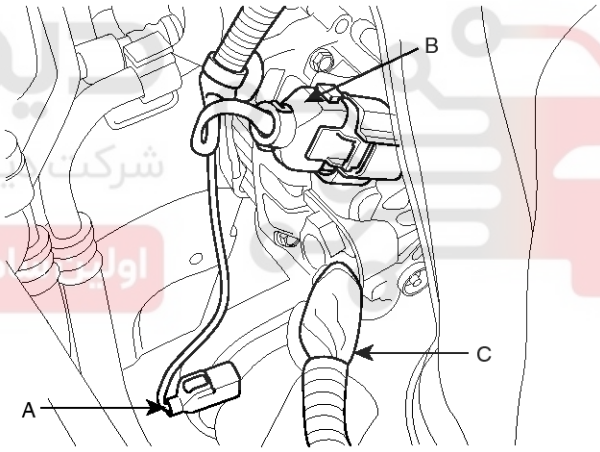

SHDEE6004D

6. Remove the alternator (A).

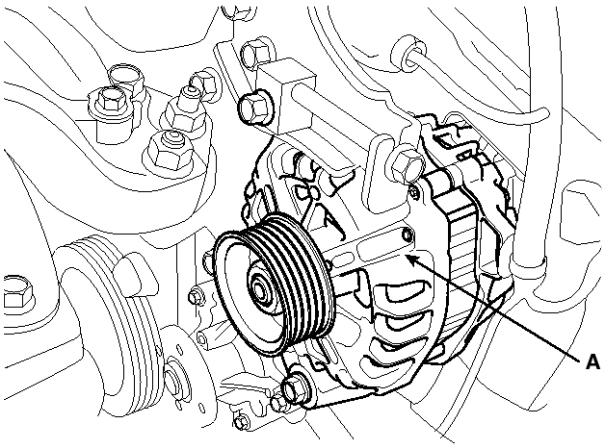

SHDEM6069D

7. Installation is the reverse order of removal.
8. Adjust the alternator belt tension after installation.

Disassembly

1. Remove the alternator cover(A).

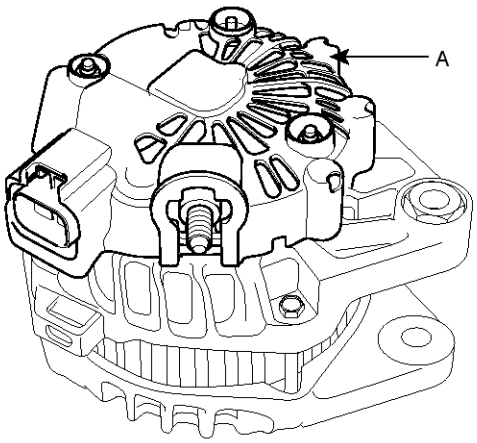

SHDEE6006D

2. Loosen the mounting bolts(A) and disconnect the brush holder assembly(B).

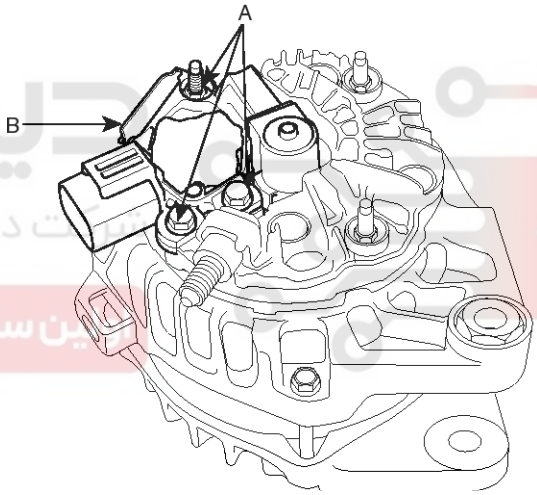

SHDEE6007D

3. Remove the slip ring guide(A).

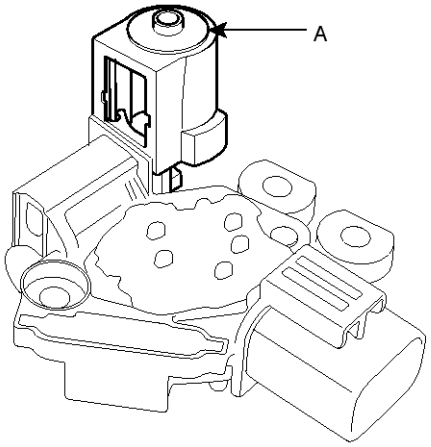

SHDEE6008D

4. Remove the nut, pulley(A) and spacer.

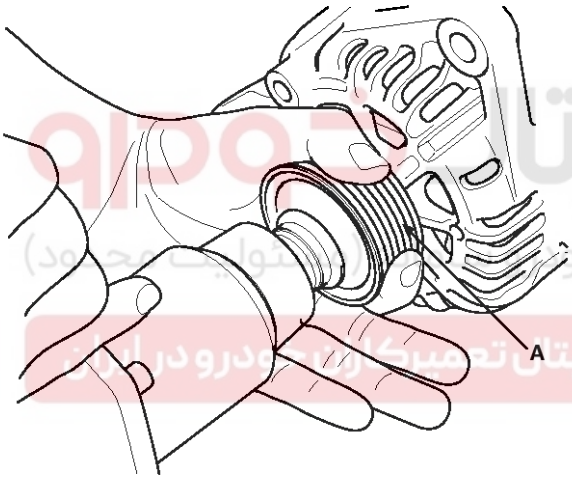

EBKD301D

5. Loosen the 4 through bolts(A).

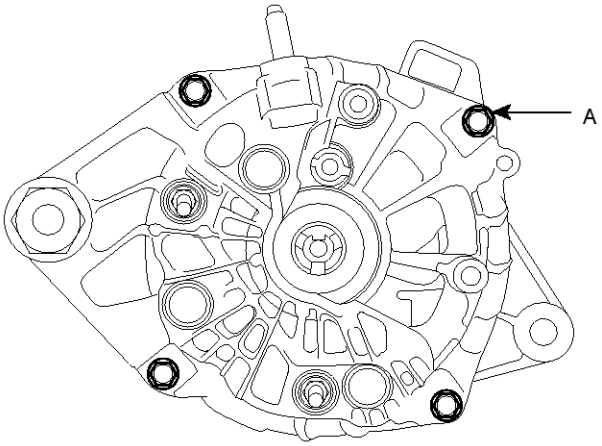

SHDEE6009D

6. Disconnect the rotor(A) and cover(B).

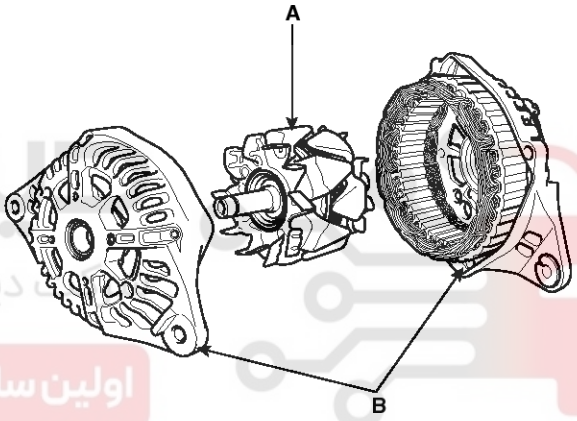

EBKD301G

7. Reassembly is the reverse of disassembly.

Inspection

Rotor

1. Check that there is continuity between the slip rings (C).

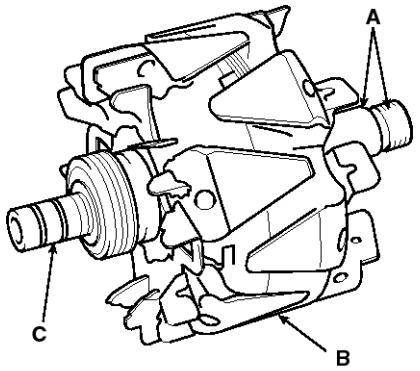

SXME19103D

2. Check that there is no continuity between the slip rings and the rotor (B) or rotor shaft (A).
3. If the rotor fails either continuity check, replace the alternator.

Stator

1. Check that there is continuity between each pair of leads (A).

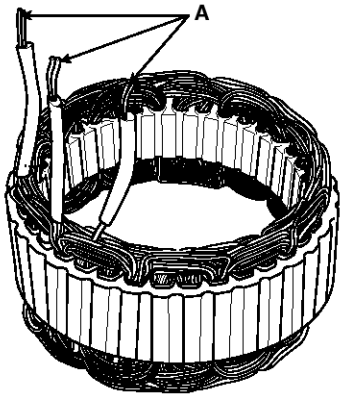

SXME19104D

2. Check that there is no continuity between each lead and the coil core.
3. If the coil fails either continuity check, replace the alternator.

Battery

Description

1. The maintenance-free battery is, as the name implies, totally maintenance free and has no removable battery cell caps.
2. Water never needs to be added to the maintenance-free battery.
3. The battery is completely sealed, except for small vent holes in the cover.

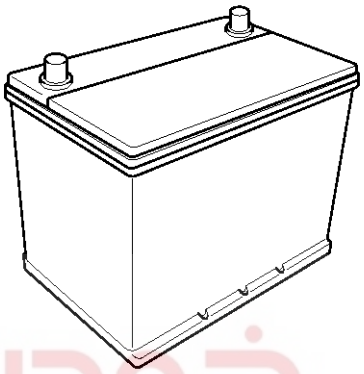

EBJD008A

NOTICE

After disconnecting then reconnecting the battery negative cable, reset some parts that require the reset procedures. (Refer to BE group – General Information)

Inspection

Battery Diagnostic Flow

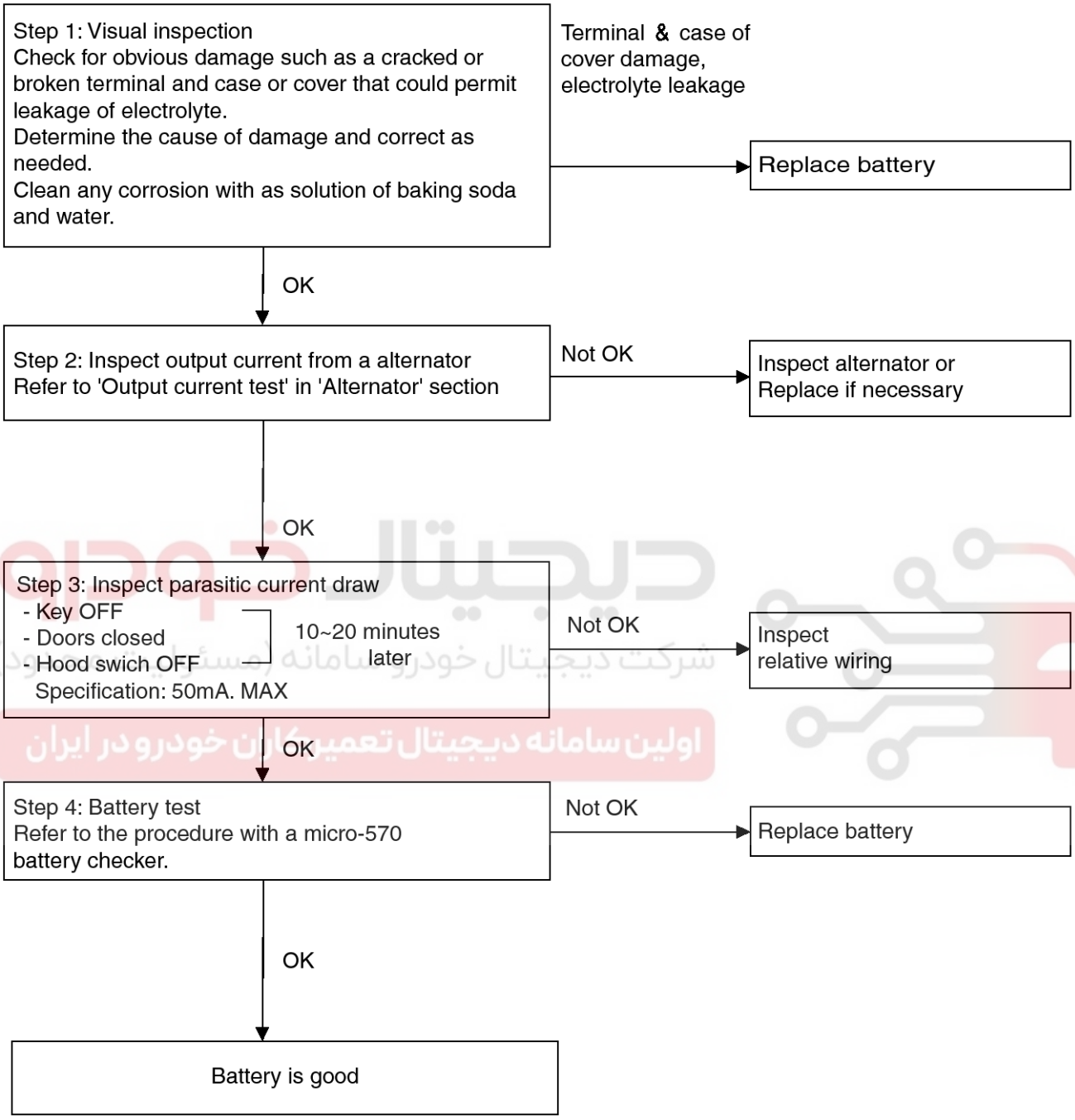

SXMEE9150L

Vehicle parasitic current inspection

1. Turn the all electric devices OFF, and then turn the ignition switch OFF.
2. Close all doors except the engine hood, and then lock all doors.
   1) Disconnect the hood switch connector.
   2) Close the trunk lid.
   3) Close the doors or remove the door switches.
3. Wait a few minutes until the vehicle's electrical systems go to sleep mode.

   NOTICE
   For an accurate measurement of a vehicle parasitic current, all electriacl systems should go to sleep mode. (It takes at least one hour or at most one day.) However, an approximate vehicle parasitic current can be measured after 10~20 minutes.
4. Connect an ammeter in series between the battery (-) terminal and the ground cable, and then disconnect the clamp from the battery (-) terminal slowly.

   CAUTION
   Be careful that the lead wires of an ammeter do not come off from the battery (-) terminal and the ground cable to prevent the battery from being reset. In case the battery is reset, connect the battery cable again, and then start the engine or turn the ignition switch ON for more than 10 sec. Repeat the procedure from No. 1.
   To prevent the battery from being reset during the inspection,
   a. Connect a jump cable between the battery (-) terminal and the ground cable.
   b. Disconnect the ground cable from the battery (-) terminal.
   c. Connect an ammeter between the battery (-) terminal and the ground cable.
   d. After disconnecting the jump cable, read the current value of the ammeter.

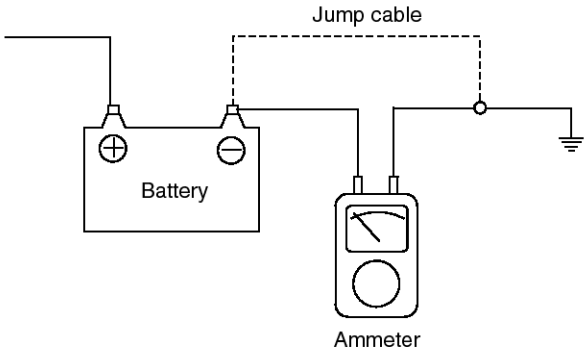

SVQEE0002L

5. Read the current value of the ammeter.
   - If the parasitic current is over the limit value, search for abnormal circuit by removing a fuse one by one and checking the parasitic current.
   - Check the parasitic current again, and search for suspected unit by removing a unit connected with the abnormal circuit one by one.

Limit value (after 10~20 min.) : Below 50mA

Cleaning

1. Make sure the ignition switch and all accessories are in the OFF position.
2. Disconnect the battery cables (negative first).
3. Remove the battery from the vehicle.

   ⚠CAUTION

   Care should be taken in the event the battery case is cracked or leaking, to protect your skin from the electrolyte.

   Heavy rubber gloves (not the household type) should be wore when removing the battery.

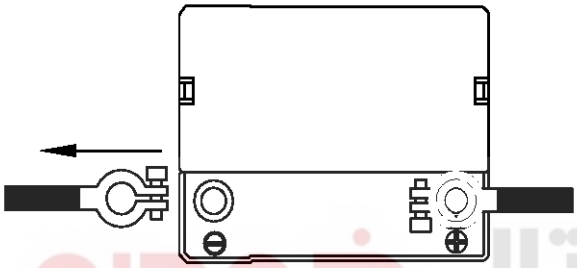

EBJD008B

4. Inspect the battery tray for damage caused by the loss of electrolyte. If acid damage is present, it will be necessary to clean the area with a solution of clean warm water and baking soda. Scrub the area with a stiff brush and wipe off with a cloth moistened with baking soda and water.
5. Clean the top of the battery with the same solution as described above.
6. Inspect the battery case and cover for cracks. If cracks are present, the battery must be replaced.
7. Clean the battery posts with a suitable battery post tool.
8. Clean the inside surface of the terminal clamps with a suitable battery cleaning tool. Replace damaged or frayed cables and broken terminal clamps.
9. Install the battery in the vehicle.
10. Connect the cable terminals to the battery post, making sure tops of the terminals are flush with the tops of the posts.
11. Tighten the terminal nuts securely.
12. Coat all connections with light mineral grease after tightening.

    ⚠CAUTION

    When batteries are being charged, an explosive gas forms beneath the cover of each cell. Do not smoke near batteries being charged or which have recently been charged. Do not break live circuit at the terminals of batteries being charged.

    A spark will occur when the circuit is broken. Keep open flames away form battery.

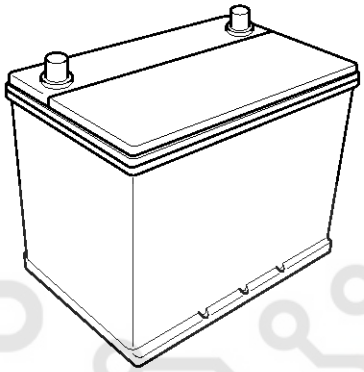

EBJD008A

Starting System

Description

The starting system includes the battery, starter, solenoid switch, ignition switch, inhibitor switch (A/T), ignition lock switch, connection wires and the battery cable.

When the ignition key is turned to the start position, current flows and energizes the starter motor's solenoid coil.

The solenoid plunger and clutch shift lever are activated, and the clutch pinion engages the ring gear.

The contacts close and the starter motor cranks. In order to prevent damage caused by excessive rotation of the starter armature when the engine starts, the clutch pinion gear overruns.

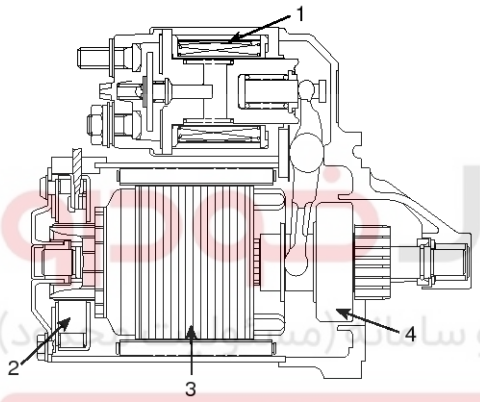

SPAEE9017L

1. Solenoid
2. Brush
3. Armature
4, Over running clutch

Troubleshooting

Starter Circuit

NOTICE

The battery must be in good condition and fully charged.

1. Remove the fuel pump relay(A) from the fuse box.

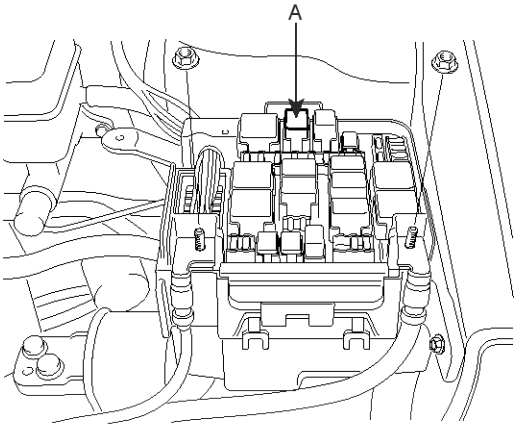

STDEE9100D

2. With the shift lever in N or P (A/T) or clutch pedal pressed (M/T), turn the ignition switch to "START"

   If the starter normally cranks the engine, starting system is OK. If the starter will not crank the engine at all, go to next step.

   If it won't disengage from the ring gear when you release key, check for the following until you find the cause.

   - Solenoid plunger and switch malfunction.
   - Dirty pinion gear or damaged overrunning clutch.

3. Check the battery condition. Check electrical connections at the battery, battery negative cable connected to the body, engine ground cables, and the starter for looseness and corrosion. Then try starting the engine again.

   If the starter cranks normally the engine, repairing the loose connection repaired the problem. The starting system is now OK.

   If the starter still does not crank the engine, go to next step.

4. Disconnect the connector from the S-terminal of solenoid. Connect a jumper wire from the B-terminal of solenoid to the S-terminal of solenoid.

   If the starter cranks the engine, go to next step.

   If the starter still does not crank the engine, remove the starter, and repair or replace as necessary.
5. Check the following items in the order listed until you find the open circuit.

   - Check the wire and connectors between the driver's under-dash fuse/relay box and the ignition switch, and between the driver's under-dash fuse/relay box and the starter.
   - Check the ignition switch (Refer to BE group - ignition system)
   - Check the transaxle range switch connector or ignition lock switch connector.
   - Inspect the starter relay.

Stater Solenoid Test

1. Disconnect the field coil wire from the M-terminal of solenoid switch.
2. Connect the battery (+) line to the S-terminal and (-) line to the M-terminal and the stater body.

   ⚠CAUTION
   This test must be performed quickly (in less than 10 seconds) to prevent the coil from burning.

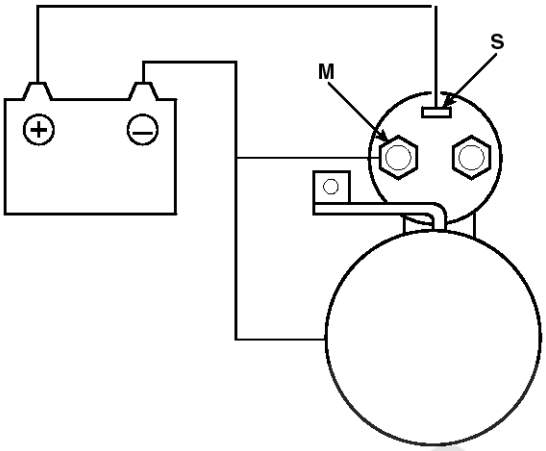

SHDEE6017D

3. Connect the field coil wire to the M-terminal.
4. If the pinion moves out, the pull-in coil of solenoid is working properly.

   If the pinion does not move, replace the magnetic switch.
5. Disconnect the (-) line from the M-terminal.
6. If the pinion doesn't have moved, the hold-in coil of the solenoid is working properly.

   ⚠CAUTION
   This test must be performed quickly (in less than 10 seconds) to prevent the coil from burning.

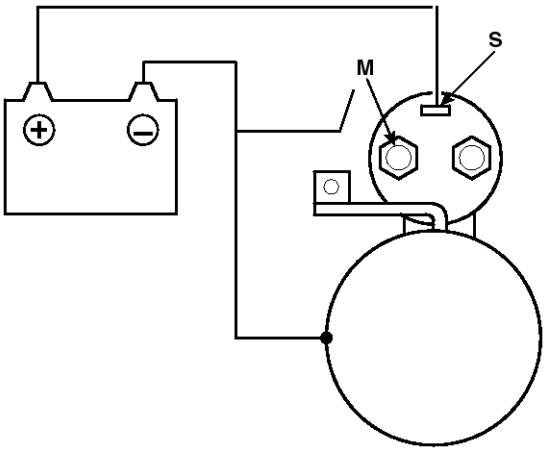

SHDEE6018D

7. If the pinion goes back in its original position when you disconnecting the (-) line from the body, the system must be in good condition.

⚠CAUTION
This test must be performed quickly (in less than 10 seconds) to prevent the coil from burning.

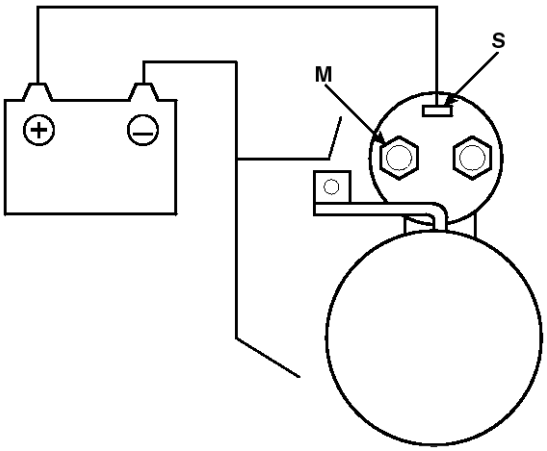

SHDEE6019D

Free Running Test

1. Place the starter motor in a vise equipped with soft jaws and connect a fully-charged 12-volt battery to starter motor as follows.
2. Connect a test ammeter (100-ampere scale) and carbon pile rheostats shown is the illustration.
3. Connect a voltmeter (15-volt scale) across starter motor.

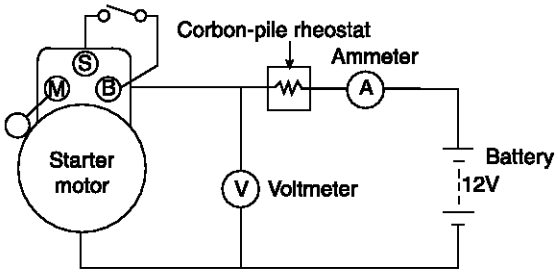

BBGE005A

4. Rotate carbon pile to the off position.
5. Connect the battery cable from battery's negative post to the starter motor body.
6. Adjust until battery voltage shown on the voltmeter reads 11volts.
7. Confirm that the maximum amperage is within the specifications and that the starter motor turns smoothly and freely.

Current : 60A MAX
Speed : 5500 rpm. MIN

Starter

Components

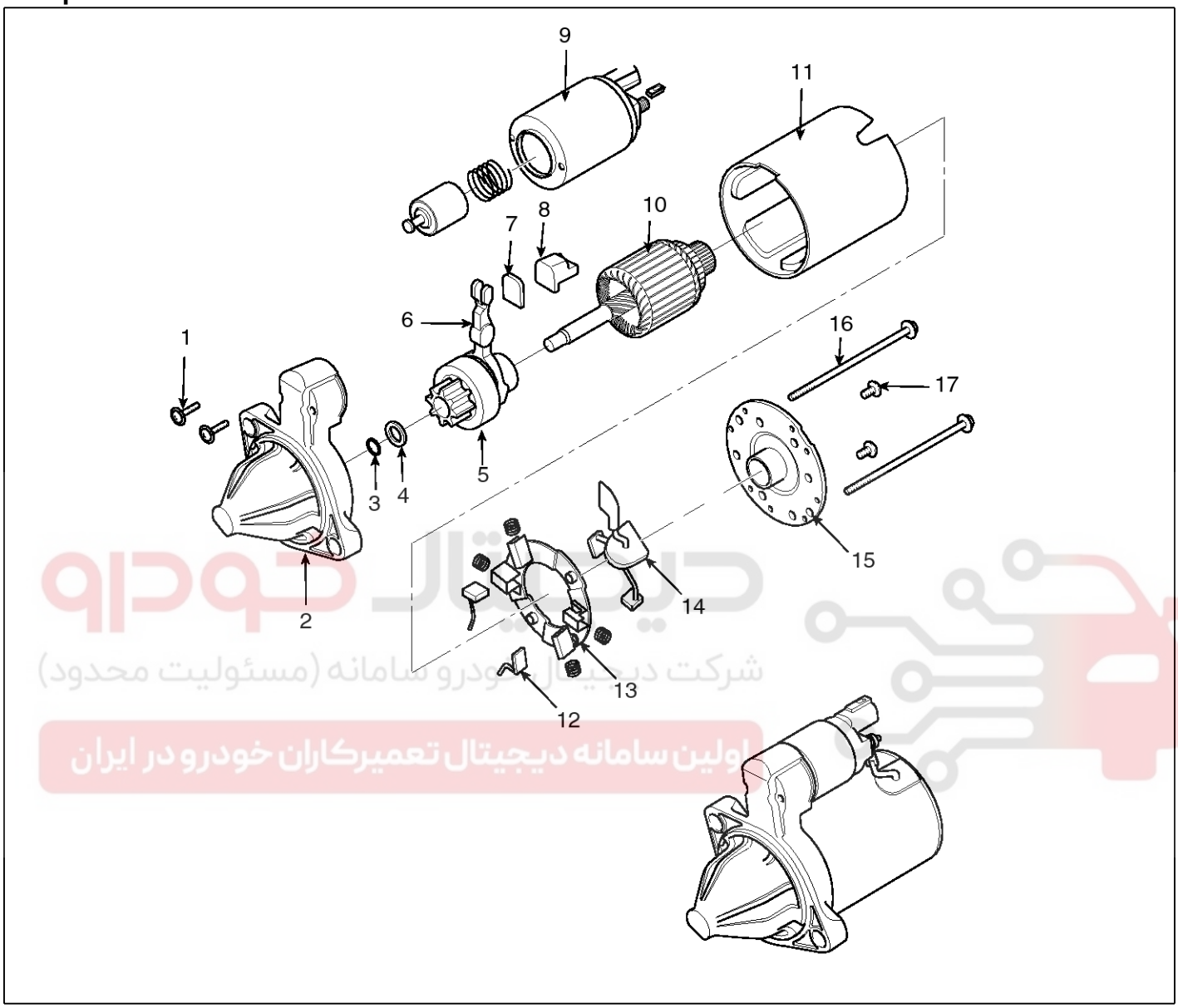

STDEE9104D

1. Screw
2. Front bracket
3. Stop ring
4. Stopper
5. Overrun clutch
6. Lever
7. Lever plate
8. Lever packing
9. Magnet switch
10. Armature
11. Yoke assembly
12. Brush (-)
13. Brush holder
14. Brush (+)
15. Rear bracket
16. Through bolts
17. Screw

Replacement

1. Disconnect the battery negative cable.
2. Remove the air cleaner assembly.
   1) Disconnect the air cleaner hose (A) and the bleeder hose (B).
   2) Remove the accelerator cable (C) from the air cleaner.
   3) Disconnect the PCM connectors (D).
   4) Remove the air cleaner assembly(E).

Tightening torque :
7.8~9.8 Nm (0.8~1.0 kgf.m, 5.8~7.2 lb-ft)

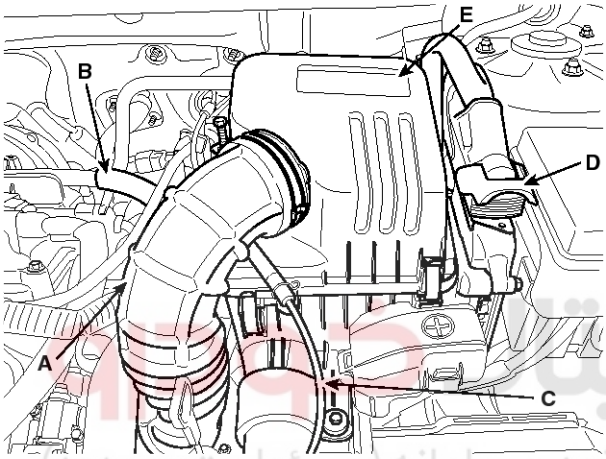

SHDEM6004D

3. Disconnect the starter cable (B) from the B terminal on the solenoid, then disconnect the connector (A) from the S terminal.

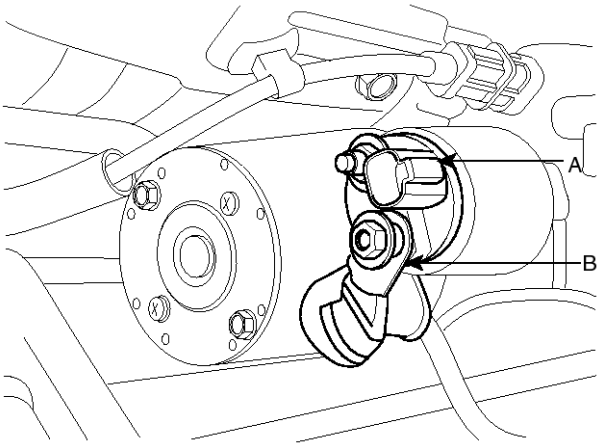

SHDEE6010D

4. Remove the 2 bolts holding the starter, then remove the starter.

Tightening torque :
42.2~53.9 Nm (4.3~5.5 kgf.m, 31.1~39.8 lb-ft)

5. Installation is the reverse of removal.
6. Connect the battery negative cable to the battery.

Disassembly

1. Disconnect the M-terminal (A) on the magnet switch assembly (B).

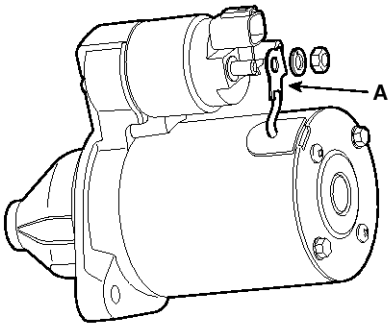

STDEE9111D

2. After loosening the 2 screws (A), detach the magnet switch assembly (B).

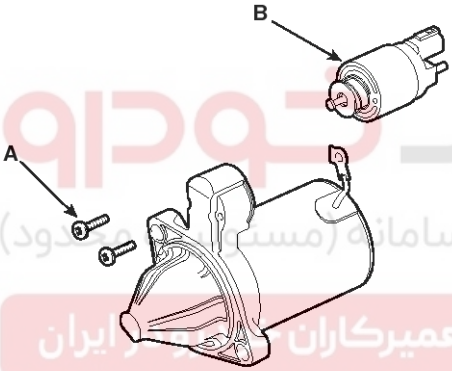

STDEE9112D

3. Loosen the brush holder mounting screw (A) and through bolts (B).

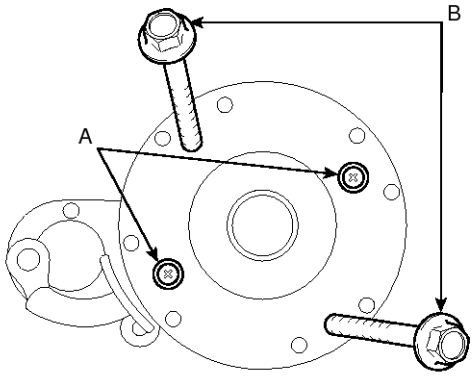

ABHE005A

4. Remove the rear bracket (A) and brush holder assembly (B).

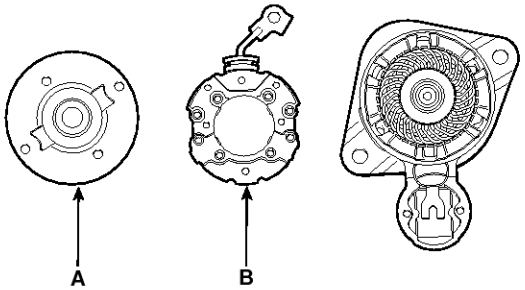

STDEE9113D

5. Remove the yoke (A).

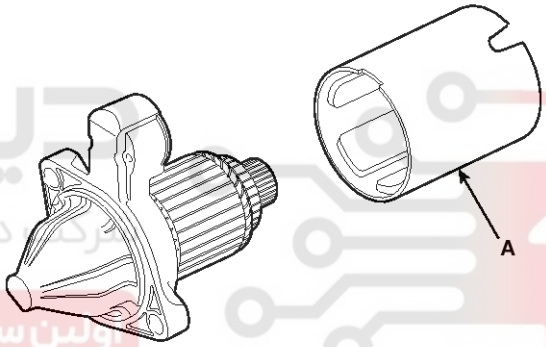

STDEE9114D

6. Remove the, lever plate (A) and packing (B).

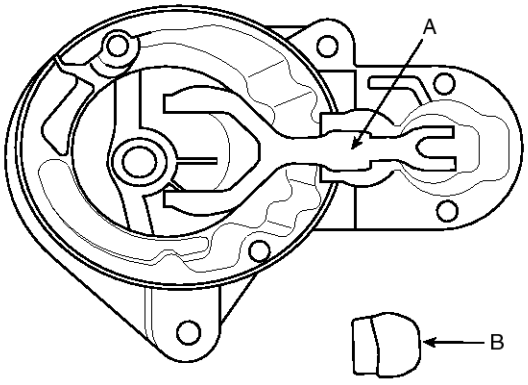

ABJF006A

7. Disconnect the armature (A) and lever (B).

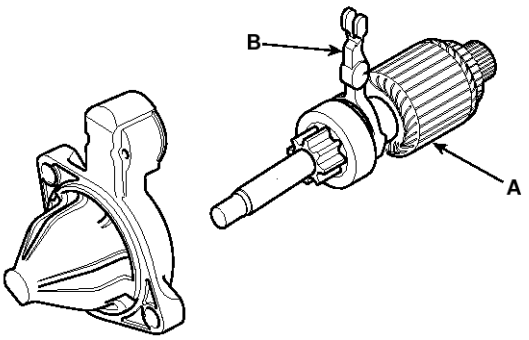

STDEE9115D

8. Press the stopper (A) using a socket (B).

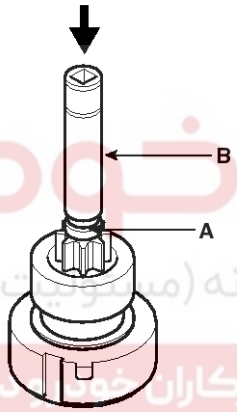

EBKD011K

9. After removing the stop ring (A) using stopper pliers (B).

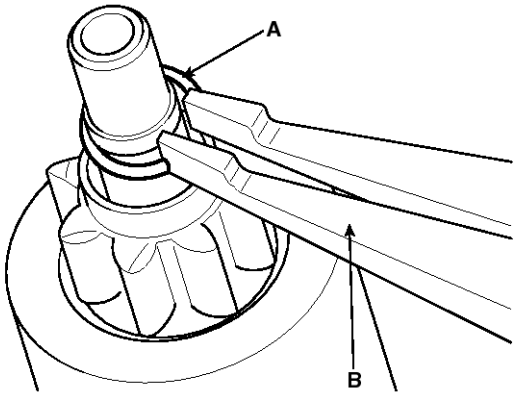

EBKD011L

10. Remove the stop ring (B), stopper (A), overrunning clutch (C) and armature (D).

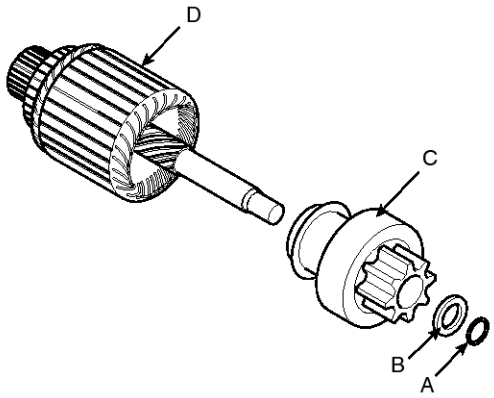

ABHE010A

11. Reassembly is the reverse of disassembly.

NOTICE

Using a suitable pulling tool (A), pull the stop ring (B) over the stopper (C).

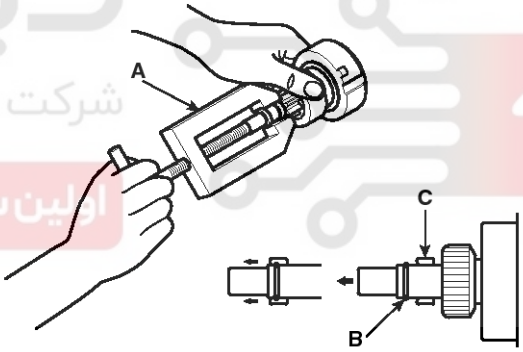

EBKD011O

Inspection

Armature Inspection And Test

1. Remove the starter.
2. Disassemble the starter as shown at the beginning of this procedure.
3. Inspect the armature for wear or damage from contact with the permanent magnet. If there is wear or damage, replace the armature.

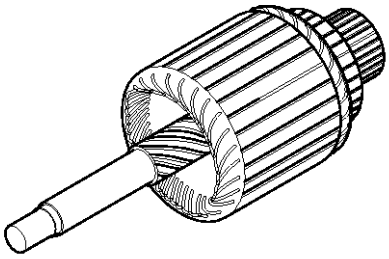

ABHE011A

4. Check the commutator (A) surface. If the surface is dirty or burnt, resurface with emery cloth or a lathe within the following specifications, or recondition with #500 or #600 sandpaper (B).

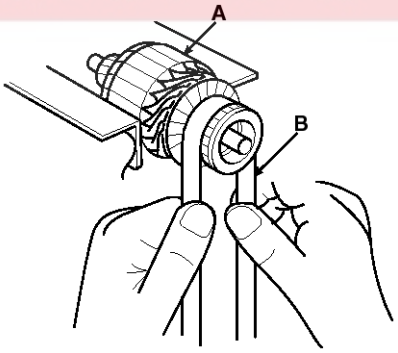

EBKD012B

5. Check the commutator diameter. If the diameter is below the service limit, replace the armature.

Commutator diameter
Standard (New) : 32.9 ~ 33.0mm (1.295 ~ 1.299in)

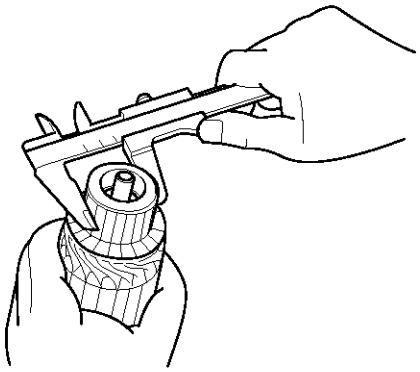

EBKD012C

6. Measure the commutator (A) runout.
   - If the commutator runout is within the service limit, check the commutator for carbon dust or brass chips between the segments.
   - If the commutator run out is not within the service limit, replace the armature.

Commutator runout
Standard (New): 0.02mm (0.00079in)
Service limit: 0.05mm (0.0020in)

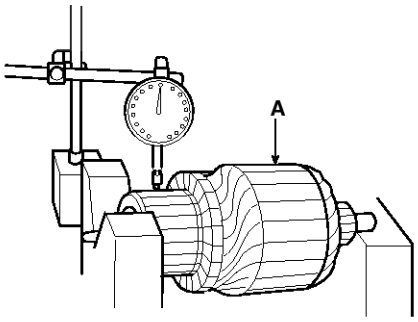

SEDEE7014L

7. Check the mica depth (A). If the mica is too high (B), undercut the mica with a hacksaw blade to the proper depth. Cut away all the mica (C) between the commutator segments. The undercut should not be too shallow, too narrow, or v-shaped (D).

Commutator mica depth
Standard (New) : 0.5 ~ 1.0mm (0.0197 ~ 0.03937in)
Service limit : 0.2mm (0.0079 in.)

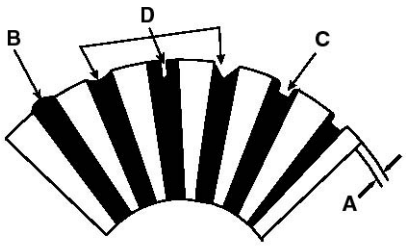

EBKD012E

8. Check for continuity between the segments of the commutator. If an open circuit exists between any segments, replace the armature.

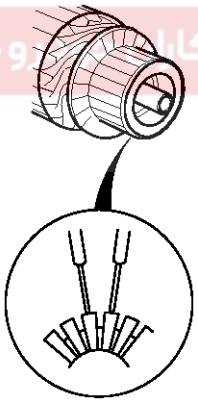

EBKD012F

9. Check with an ohmmeter that no continuity exists between the commutator (A) and armature coil core (B), and between the commutator and armature shaft (C). If continuity exists, replace the armature.

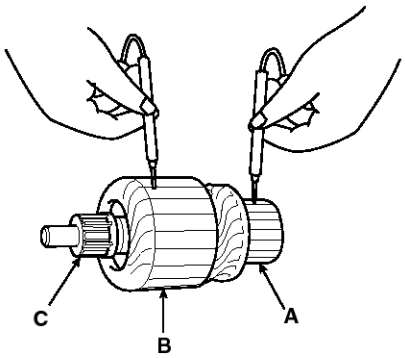

EBKD012G

Inspect Starter Brush

Brushes that are worm out, or oil-soaked, should be replaced.

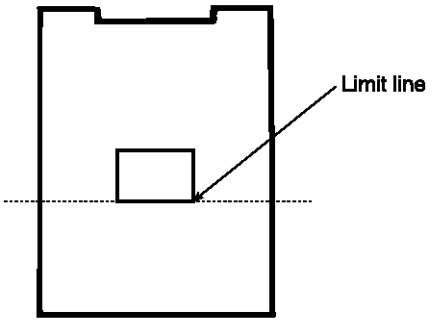

BBGE008A

NOTICE

To seat new brushes, slip a strip of #500 or #600 sandpaper, with the grit side up, between the commutator and each brush, and smoothly rotate the armature. The contact surface of the brushes will be sanded to the same contour as the commutator.

Starter Brush Holder Test

1. Check that there is no continuity between the (+) plate (A) and (-) plate (B). If there is continuity, replace the brush holder assembly.

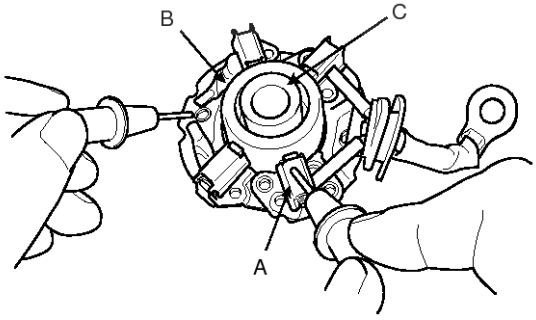

STDEE9106D

NOTICE

Use a pipe (C) of suitable size for the brushes not to get removed from the brush holder.

Inspect Overrunning Clutch

1. Slide the overrunning clutch along the shaft.

   Replace it if does not slide smoothly.
2. Rotate the overrunning clutch both ways.

   Does it lock in one direction and rotate smoothly in reverse? If it does not lock in either direction of it locks in both directions, replace it.

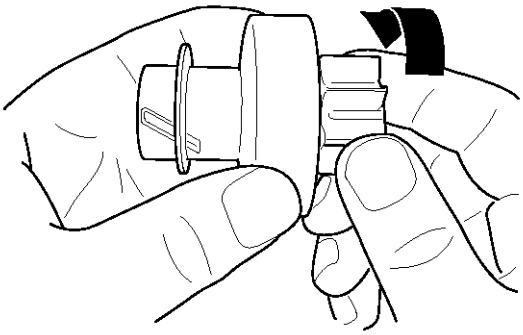

ABHE013A

3. If the starter drive gear is worn or damaged, replace the overrunning clutch assembly. (the gear is not available separately).

   Check the condition of the flywheel or torque converter ring gear if the starter drive gear teeth are damaged.

Cleaning

1. Do not immerse parts in cleaning solvent. Immersing the yoke assembly and/or armature will damage the insulation. Wipe these parts with a cloth only.
2. Do not immerse the drive unit in cleaning solvent. The overrun clutch is pre-lubricated at the factory and solvent will wash lubrication from the clutch.
3. The drive unit may be cleaned with a cloth or air.

   Any solvent should not be used.

Starter Relay

Inspection

1. Remove the fuse box cover.
2. Remove the starter relay (A).

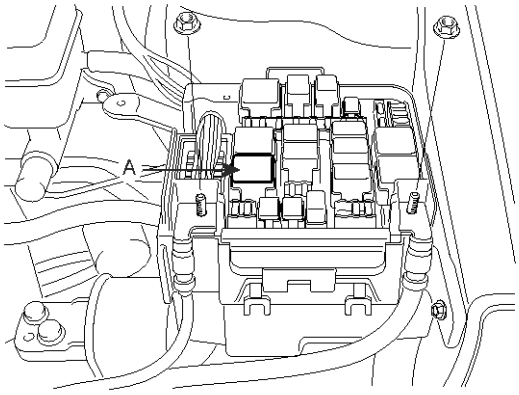

STDEE9105D

3. Using an ohmmeter, check that there is continuity between each terminal.

Terminal	Continuity
30 - 87	NO
85 - 86	YES

4. Apply 12V to terminal 85 and ground to terminal 86. Check for continuity between terminals 30 and 87.

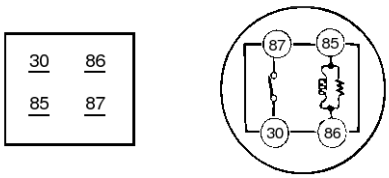

LDAD510B

5. If there is no continuity, replace the starter relay.
6. Install the starter relay.
7. Install the fuse box cover.